ATT-TP-76200

Network Equipment and Power Grounding, Environmental, and Physical Design Requirements

To:	Telecommunications Equipment Suppliers
Effective Date: **Issue Date:**	June 2014 June 2014
Expires On:	N/A
Related Documents:	Telcordia GR-63-CORE, GR-1089-CORE, GR-3108, ATTIS-0600307, ATTIS-0600315, ATTIS-0600319, ATTIS 0600019 and ATTIS 0600020, ATIS 06000.10.03.2011 and ATTIS-0600329.
Cancelled Documents:	AT&T Services, Inc., ATT-TP-76200, Issue 18.
Issuing Department:	Network Staff, GES Common Systems
Business Unit:	AT&T Services Incorporated
Points of Contact:	For additional copies of this document contact: Phone number: (517) 788-6872 e-mail: apex.ntwk@ameritech.com
Author (s):	**Huel Halliburton**: Technical, Section 8 & 12 (404)374-6457 **Jason Neal,** Technical Section 14 (925)823-2736 **Larry Payne**, Technical Sections 2 & 3, (205) 972-8825 **John Messina,** Technical Sections 4, 5, 7 & 13 (203)265-8060 **John Tablerion,** General and Process Appendices A & B (708) 403-4450 **Keith Lanning,** Technical Section 6 (770)329-7193 **Edward Williamson,** Technical Sections, 9, 10 & 11 (925) 602-2250 **John Fuller,** Technical radio frequency, RFTX Form (423) 586-5816

Copyright ©2014, AT&T . All Rights Reserved.

Table of Contents

ATT-TP-76200 1

1. General 6

1.1. Requirements and Objectives 6

1.2. Purpose 6

1.3. Scope 6

1.4. Definitions 6

1.5. ATT-TP-76200 Internet Web Site 7

1.6. Equipment Evaluation Process 7

1.7. Equipment Evaluation Types 8

1.8. Equipment Requirement Levels 8

1.9. Equipment Types 9

1.10. Equipment Deployment Locations 11

1.11. Equipment Testing Requirements 13

1.12. Laboratory Accreditation Requirements 13

1.13. Additional AT&T GES Common Systems Requirements 14

1.14. GES Common Systems Placement and Interconnection Standards 15

1.15. Applicability of Other Publications 15

1.16. Reasons for Re-issue 15

1.17. Effective Date of this Issue 15

1.18. Comments 16

2. Electromagnetic Compatibility 17

2.1. GR-1089-CORE 17

2.2. Equipment Type 17

2.3. Electromagnetic Interference 17

2.4. Conducted Emissions 18

2.5. Immunity 18

2.6. Lightning and AC Power Faults 18

2.7. Steady State Power Induction 19

2.8. Electrical Safety Criteria 19

2.9. DC Potential Difference 19

3. Acoustic Noise 21

4. Electrostatic Discharge (ESD) and Electrical Fast Transients (EFT) 21

4.1. ESD Immunity Criteria 21

Copyright ©2014, AT&T . All Rights Reserved.

4.2. Special Requirements and Maintenance Information 21
4.3. Electrical Fast Transient (EFT) 21
5. Grounding 22
5.1. Bonding and Grounding Requirements 22
6. Thermal 23
6.1. General 23
6.2. Temperature and Humidity 23
6.3. Altitude 23
6.4. Heat Dissipation 24
6.5. Surface Temperature 26
6.6. Air Flow 26
7. DC Power 31
7.1. Steady-State Input DC Voltage Requirements 31
7.2. Undervoltage Requirements 31
7.3. Minimum Operating Voltage 32
7.4. Current Drains 32
7.5. Overvoltage Requirements 32
7.6. Overvoltage Transient Requirement 32
7.7. Protective Device Operation Transient 32
7.8. Electrical Noise Requirements 32
8. Airborne Contaminants 33
8.1. Controlled Environments 33
8.2. Uncontrolled Environments (OSP/CELL-SITE) 33
8.3. Fan Filter Requirements 34
9. Shock and Vibration 35
9.1. **Handling and Transportation - Shock** 35
B. Outside Plant / Cell Site application 35
9.2. **Handling and Transportation - Vibration** 35
9.3. Seismic - Vibration 35
9.5 Hard Drive Backup 36
9.6 Standard Frame 36
9.9 Floor Loading 37
10. Fire Resistance 38

Copyright ©2014, AT&T . All Rights Reserved.

10.1. ***Minimum Fire Resistance*** 38
10.2. ***Auxiliary Equipment*** 38
10.3. ***Materials/Components*** 38
10.4. ***Protective Barriers*** 38
10.5. ***Fire Test Video*** 39
11. Spatial....39
11.1. General 39
11.2. Equipment System 39
11.3. Equipment Unit 39
11.4. Framework and Equipment Requirements 40
B. Equipment intended for four post framework installation lineups: 40
11.5. Equipment Floor Loading 41
11.6. Equipment Units 41
12. Physical Design and Manufacturing Requirements 43
12.1. Physical Design and Manufacturing....43
12.2. PB-free Solder Joint Reliability....43
13. Energy Efficiency Testing Requirements....44
13.1. Purpose....44
13.2. ATIS Energy Efficiency Standards....44
13.3. Telecommunications Energy Efficiency Ratio 45
13.4. Application 45
13.5. Standards Development....45
13.6. Energy Efficiency Report....45
14. Outside Plant/Cell Site Deployment Configurations and Enclosures....46
14.1. Deployment Configurations....46
14.2. OSP/CELL-SITE Enclosure 46
15. Equipment Information Form Description 46
15.1. General 46
15.2. ESR Form Description....46
15.3. ESP Form Description....46
15.4. FRM Form Description 47
15.5. PbF Form Description....47
15.6. RF Transmitter Form Description....47

Copyright ©2014, AT&T . All Rights Reserved.

15.7. ESP-001 Form 48
15.8. ESP-002 Form 51
15.9. ESR-001 (CG Level 1)....54
15.10. ESR-001-(OSP/CELL-SITE Level 1) 55
15.11. ESR-003-(CG Level 3) 56
15.12. ESR-003-(NCG Level 3 and Level 1) 57
15.13. ESR-003-OSP/CELL-SITE (Level 3) 58
15.14. ESR_ANC 59
15.15. FRM-001 Form 60
15.16. PbF Form 61
15.17. RFTX Form 62
16. APPENDIX A 63
16.1. Purpose....63
16.2. Evaluation Types, Evaluation Levels and Equipment Locations 63
16.3. Product Evaluation Documentation....63
16.4. Test Report Documentation Package....63
16.5. ATT-TP-76200/ATT-TP76450 Documentation Package 64
16.6. AT&T Services Documentation Package Evaluation Process....66
16.7. AT&T Services Product Evaluation Fast Track Process....66
A. ATT-TP-76200 Fast Track General guidelines:....66
16.8. AT&T Letter of Attestation:: 68
16.9. Product Change Notice Statement 71
16.10. Form LOA-LE....72
16.11. SJR Pb-free Solder....73
16.12. Outside the United States 74
17. APPENDIX B:....77
17.1. Purpose....77
17.2. General 77
17.3. Retest Guidelines by ATT-TP-76200 Sections....77
F. Temperature and Humidity....78

Copyright ©2014, AT&T . All Rights Reserved.

1. General

1.1. *Requirements and Objectives*

This document provides the requirements and objectives for the power, grounding, environmental, and physical design of Telecommunications equipment intended for use in network facilities, including outside plant/cell site and customer's premises. The appendices included in this section discuss AT&T's equipment evaluation process and identify the type of Equipment information required from equipment suppliers for the equipment evaluation process.

1.2. *Purpose*

The purpose of this document is to provide equipment suppliers with a comprehensive reference of equipment requirements and objectives for the subjects covered. A equipment's compliance with the requirements and objectives of this section will not be the sole basis for the acceptance of the equipment, however noncompliance with one or more of the requirements or objectives of this section may be the basis for a equipment's denial of purchase.

1.3. *Scope*

Unless otherwise stated, the requirements contained herein apply to equipment systems and assemblies intended for installation in all AT&T network equipment spaces, including, electronic equipment enclosures such as controlled environmental vaults, outside electronic equipment cabinets, and customer locations.

1.4. *Definitions*

A. The term **equipment supplier** as used throughout this section refers to the equipment manufacturer or agent of the equipment manufacturer, whichever is appropriate for the equipment being considered.

B. The term **company representative** as used throughout this section refers to the AT&T employee representing AT&T

C. Requirements are those equipment features that **must** be provided by the equipment manufacturer. The words "shall" and "must" are used throughout this section to identify requirements.

D. Objectives are equipment features that are **desired** for the long term use or application. The word "should" is used throughout this section to identify objectives.

Copyright ©2014, AT&T . All Rights Reserved.

1.5. *ATT-TP-76200 Internet Web Site*

Copies of this document and general information about AT&T's environmental equipment standards may be found at https://ebiznet.sbc.com/sbcnebs/.

1.6. *Equipment Evaluation Process*

Equipment must demonstrate conformance to subsets of requirements contained in ATT-TP-76200 depending on the intended application and deployment location(s) of the equipment. Specific requirements for each level and location are identified in the corresponding Equipment Supplier Requirements checklist (ESR) matrix forms identified in Table 1-1 See Appendix A for processes required to document conformance to requirements

Unless the AT&T Fast Track process is used (see Appendix A), for requirements that call for testing to verify conformance, test reports and forms **must** be forwarded to AT&T for review before the equipment will be evaluated as in conformance.

Copyright ©2014, AT&T . All Rights Reserved.

1.7. *Equipment Evaluation Types*

New Product (ESR-003 and/or ESR-001)

New Product requirements refer to a subset of requirements that apply to all new equipment systems proposed for use in the AT&T communications network. New Products shall be evaluated for compliance to all applicable Level 3 and/or Level 1 testing and requirements.

Ancillary (ESR-ANC) (Level 1 or 3). Ancillary requirements refer to a subset of requirements that apply to additions to or changes to equipment previously approved for use in AT&T.If a change to an existing product, or sub-system of the product, results in the assignment of a new CLEI code, the product shall be evaluated for compliance to Ancillary requirements. See Appendix B for guidelines applicable to special considerations for testing of enhanced products.

Product Change Notices (PCN). PCNs indicate a change to existing equipment that has been previously evaluated for compliance to this document. PCNs must be evaluated for their effect on the equipment's ATT-TP-76200 compliance.

- When the manufacturer, a test lab or AT&T Services determine that the PCN may affect the equipment's ATT-TP-76200 compliance, the modified equipment must be tested per ATT-TP-76200, Ancillary Requirements (ESR-ANC).

  NOTE: Depending on engineering judgment, not all requirements may need to be tested.

- When it is determined by the manufacturer, using sound engineering judgment, that a hardware or software change does not impact the equipment's ATT-TP-76200 compliance, the manufacturer may submit a letter of attestation to this effect. See Appendix A, paragraph 16.8.

  NOTE: Except when it is obvious that the PCN will not affect the equipment's compliance, AT&T Services recommends that an accredited, third party, independent laboratory evaluate whether testing is required to verify compliance.

1.8. *Equipment Requirement Levels*

Level-One (ESR-001-XXX). Level One refers to a subset of ATT-TP-76200 requirements that forms the minimum acceptable safety requirements necessary to protect personnel and the network. Level One is applicable for Collocator's equipment and may be applicable for AT&T equipment that is not critical to the network or otherwise specified by AT&T (e.g. monitoring and test equipment).

Level-Three - (ESR-003-XXX). Level Three refers to the maximum applicable ATT-TP-76200 safety and environmental reliability requirements for equipment deployed in the network.

Copyright ©2014, AT&T . All Rights Reserved.

Unless otherwise detailed in this document or instructed by AT&T, Level Three is the applicable level for all network equipment.

1.9. *Equipment Types*

Carrier Grade Equipment (CG) – Equipment designed and verified for high reliability and/or safety use in Carrier Communications Spaces. See ESR-CG Level 1 and 3.

Non-Carrier Grade Equipment (NCG) – Equipment designed and verified to meet common commercial grade safety and reliability requirements. See ESR-NCG Level 1 and 3.

Network Administrative Support Equipment - Administrative network support equipment (e.g., computers, monitors, telephones, etc.) located in any network equipment space shall meet Non-Carrier Grade (NCG) Level 1 safety requirements.

Outside Plant (OSP/CELL-SITE) Equipment *– CG equipment designed and verified to meet hardened environmental requirements. There are four levels of OSP/CELL-SITE equipment:

- **OSP/CELL-SITE Class 1 - Controlled Protected Environments** refers to an internal environment typical to Huts and CEVs, per GR-3108-CORE
- **OSP/CELL-SITE Class 2 - (-40C to +65C) Protected Equipment in Outside Environments** refers to an internal environment typical to GR-487 compliant remote cabinets, per GR-3108-CORE
- **OSP/CELL-SITE Class 3 - (-40C to +70C) Protected Equipment in Severe Outside Environments** refers to an internal environment typical of GR-487 non-compliant remote cabinets, per GR-3108-CORE.
- **OSP/CELL-SITE Class 4 - Unprotected Environments Directly Exposed to Weather** refers to an open, unprotected environment such as ONTs, and active NIDs (iNIDs), etc where the equipment electronics are an integral part of the enclosure

Specific requirements for OSP/CELL-SITE electronic equipment are embedded in each section of this document and summarized in Forms ESR-001-OSP/CELL-SITE and 003-OSP/CELL-SITE.

*****Per Telcordia GR-3171, Generic Requirements for Network Elements Used in Wireless Networks Physical Layer Criteria, equipment deployed in an outside wireless network shall meet the same requirements as equipment deployed in wire line outside environments.

Copyright ©2014, AT&T . All Rights Reserved.

NOTE: **For questions of test requirements for OSP/CELL-SITE cabinets and other enclosures contact Jason Neal (925)823-2736, (ATT-TP76205) e-mail jn6729@att.com. (See Section 14)**

Radio Frequency (RF) Transmitting Devices – An "RF transmitting device" is one which produces RF outside the scope of GR-1089 leakage emissions. Any equipment (limited to network, administrative, or test equipment) which includes an RF transmitting device and is proposed for use in or adjacent to network equipment areas must be evaluated by AT&T to assess its potential for disturbing other network equipment.

Equipment types requiring RF evaluation include:

- RF transmitting devices, with or without incorporated transmitting antennas. Examples include wireless, cellular, or radio communications systems, WiFi communicating equipment (access points, etc.), and wireless control or data acquisition systems

  NOTE: Commercially available personal mobile communications devices such as cellular/mobile phones, tablets, and other personal data devices which utilize cellular or WiFi need not be evaluated for these deployment locations. These devices are conditionally permitted in accordance with the GNFO CO RF Policy, ATT-TELCO-002-200-354.

- Discrete antennas or antenna systems connected to radio transmitters, such as cellular, DAS, public safety, paging, or other radio communication system

- Electrical arc discharge equipment

- Strobe or flash equipment (photographic or otherwise).

See section 2.3.C for evaluation requirements.

Portable Test Equipment – Equipment used on a temporary, as-needed basis to monitor the network in a Network Equipment Space. Equipment is removed nightly.

At a minimum, portable test sets, including OSP/CELL-SITE test sets, will be reviewed to the following requirements prior to deployment:

- Electrical Safety Review: An electrical safety review is necessary when the output voltage of the equipment exceeds 140 volts DC or 50 volts rms AC.

- Radiated Emissions: A review is necessary when the equipment supplier cannot certify compliance to FCC Part 15. In the absence of FCC Part 15 compliance, the radiated emissions requirements and test methods of GR-1089, Section 3 shall apply.

NOTE: Portable test sets that do not exceed 140 volts DC or 50 volts rms AC and are certified compliant to FCC Part 15, may be considered in compliance with the electrical safety and radiated emissions requirements and do not require review by the ATT-TP-76200 Evaluation Team.

Copyright ©2014, AT&T . All Rights Reserved.

Network Administrative Support Equipment - Administrative network support equipment (e.g., computers, monitors, telephones, etc.) located in any network equipment space shall meet Non-Carrier Grade (NCG) Level 1 safety requirements.

Collocator Equipment – Equipment placed in AT&T Network Equipment Spaces by a non-AT&T company.

Per FCC Order 99-48, AT&T may verify that Collocator's equipment meets the same safety requirements as equipment that AT&T places in its network. A list of equipment known to be deployed in AT&T's network may be obtained from the All Equipment List (AEL) located on the AT&T extranet site at https://clec.sbc.com/clec/ (this site is available to Collocators who have a working contract with AT&T). Equipment that is already listed on the AEL will not be required to undergo a safety evaluation for compliance to this document*.

Equipment not listed on the AEL must be evaluated for compliance to ATT-TP-76200 Level 1 (safety) requirements or Telcordia SR-3580 Level 1 (safety) requirements*.

NOTE: An ATT-TP-76200 ESP Form must also be provided to allow for network integration. (See Appendix A for an overview of the evaluation process).

*Equipment on the AEL and equipment that has been evaluated as compliant to this requirement must still meet the requirement of being necessary for interconnection and access to UNEs.

1.10. *Equipment Deployment Locations*

Network Equipment Space – Network Equipment Space refers to any AT&T carrier managed building space, owned, leased or customer provided, that is primarily used for equipment dedicated to the transport, interconnection and switching of network voice, video and data. Network Equipment Space includes Carrier Communications Space and Non-Carrier Communications Space.

Carrier Communications Space - AT&T Network Equipment spaces primarily dedicated to communications switching and transport equipment. Examples of these locations include COs, L-T POPs, SNRCs, MTSOs, NTCs, huts, CEVs, and environmentally controlled cell site structures, Due to national, state and local codes specific to these locations, there are ATT-TP-76200 requirements that are specific to Carrier Communications Spaces (e.g., GR-63 Fire Spread).

Partitioned Network Space: - Network Equipment Space physically separated from Carrier Communications Space. This space typically houses network equipment that does not meet minimum Carrier Grade Communications safety criteria and/or code compliance criteria for deployment in Carrier Communications Spaces . Examples of these locations include Customer Premise and VHO's-SHOS's. Space separated by one-hour fire rated barriers (e.g. walls, floors, ceiling, doors, etc.) from Carrier Communications Space.

Copyright ©2014, AT&T . All Rights Reserved.

Outside Plant (OSP/CELL-SITE) – Outside plant part of the network. Typically network locations between the inside of Network Equipment Space buildings and Customer Premises Antenna locations. OSP/CELL-SITE equipment shall be Carrier Grade.

Most of World (MoW) - Equipment Deployed Outside the United States:
Equipment Deployed Outside the United States will require verification of compliance to ATT-TP-76200/ATT-TP76450 per Appendix A and completed MoW Letter of Attestation per Section 16 Form 16.12.

AT&T Test Laboratory – the primary purposes of lab entry requirements for equipment under test are to ensure the safety of personnel and property. It is the objective of this requirement that verification of compliance to industry safety standards be provided for equipment prior to lab entry. However, due to needs of the business and the fact that the lab is staffed by personnel trained to work with prototype equipment, there are times when it may be necessary for AT&T to allow equipment into its lab that has not been verified in compliance to safety standards. In those cases it is incumbent upon the manufacturer to assure the equipment is safe to operate. AT&T labs will assess acceptance and test protocols for this equipment on a case-by-case basis.

1) Objective: Prior to entry into AT&T labs, equipment should be compliant to ATT-TP-76200 Carrier Grade Level 1 requirements, or Non- Carrier Grade Level 1 requirements, or be Listed (e.g. UL 60950)
2) Requirement: If equipment does not meet the above objective, the manufacturer shall submit a notarized Letter of Attestation (LOA) that the equipment meets industry electrical safety, electromagnetic emissions and fire safety standards

NOTE: The above requirements are applicable only for AT&T laboratory testing. All applicable ATT-TP-76200 and ATT-TP-76450 requirements must be evaluated as in conformance prior deployment into the network.

Table1.1
Requirements For New Equipment Evaluations

Locations:	Carrier Communications space		Customer Prem/Partitioned space		OSP/Cell Site Class 2-4	
Levels:	Level 1	Level 3	Level 1	Level 3	Level 1	Level 3
Equipment Types:						
Carrier Grade	ESR-CG L1	ESR-CG L3	CG L1 + NCG L1	CG L3 + NCG L1	ESR - OSP L1	ESR-OSP L3
Non-Carrier Grade	ESR-CG L1	ESR-CG L3	ESR-NCG L1	NCG L3	ESR - OSP L1	ESR-OSP L3
Radio Frequency (RF)	ESR-CG L1	ESR-CG L3	ESR-NCG L1	NCG L3	ESR - OSP L1	ESR-OSP L3
Network Admin Support	ESR-NCG L1	N/A	ESR-NCG L1	N/A	N/A	N/A
Collocator	ESR-CG L1	N/A	N/A	N/A	N/A	N/A

*** Note: Less frequent type of evaluations are detailed within this document**

Copyright ©2014, AT&T . All Rights Reserved.

1.11. *Equipment Testing Requirements*

Any alterations to the test protocols given in this document or in referenced test standards documents must be clearly identified in the executive summary and the test results sections of test reports. Testing performed per the Telecommunications Providers Group (TCG) checklist will be acceptable to AT&T. This checklist is available on AT&T's web site at https://ebiznet.sbc.com/sbcnebs/.

- Conditional Requirements and Objectives contained in referenced industry standards shall not be considered AT&T requirements unless explicitly stated within the requirements sections of this document

- ETSI standards may be accepted on a case by case basis in lieu of GR/ATIS test results

1.12. *Laboratory Accreditation Requirements*

For tests completed after January 1st, 2004, AT&T Services will only accept test reports submitted by testing laboratories that are accredited by an accreditation agency (e.g., the American Association for Laboratory Accreditation, National Voluntary Laboratory Accreditation Program) that is recognized by the National Cooperation for Laboratory Accreditation.

- The scope of accreditation must include the test standards referenced in test reports.
- AT&T Services will accept test reports that include test data generated at non-accredited test laboratories if the tests are witnessed and verified by a representative from a company that operates an accredited test laboratory. Records shall be retained that clearly demonstrate that the individual who witnessed the test has the appropriate expertise and competence. Submitted test reports shall clearly distinguish test data generated in-house at an accredited laboratory from witnessed and verified test data. The test report shall also contain a statement attesting to the compliance of the testing to applicable standards.
- Test laboratories located outside of the United States shall be accredited in accordance with ISO/IEC Guide 25 or ISO/IEC 17025. This accreditation must be performed by a nationally recognized accrediting body operating in accordance with ISO/IEC Guide 58. Testing performed outside of the United States by a non-accredited laboratory or manufacturer's performed testing may be accepted if witnessed and verified by a U.S. Nationally Recognized Testing Laboratory.
- Each test report submitted to AT&T Services shall contain accreditation and scope information or a letter containing this information may be forwarded for our files.

Copyright ©2014, AT&T . All Rights Reserved.

1.13. *Additional AT&T GES Common Systems Requirements*

The following is for notification purposes only. Refer to the directions given to obtain further information on these subjects. Verification of conformance to these subjects is not part of the evaluation process for this section.

Alarms

A. The AT&T Services Alarm Standards Technical Manual, BSP 801-601-900MP, is the official repository of standard alarm information for all network elements (NE) deployed within the AT&T Local Exchange Carriers' (AT&T LEC) network of central offices and remote locations, exclusive of switching equipment. Specifically, this document includes, but is not limited to, concepts and philosophies, interconnect methodologies and alarm details, as related to the alarm monitoring of transmission equipment, loop equipment, power equipment and building or environmental equipment. This document is available to equipment manufacturers which have non-disclosure contracts with AT&T at the AT&T Services Extranet web site. Questions regarding access to this web site should be referred to the vendor's local AT&T Services contacts. All others should reference the requirements for alarms found in Section 4 of ATT-TP-76450.

B. Prior to the installation of any network equipment into an AT&T LEC location, and, as part of the Approval For Use (AFU) process, all such equipment shall be reviewed by the Alarm Standards Committee to ensure that it meets the minimum alarm requirements set forth in the afore mentioned ATT 801-601-900 and/or ATT-TP-76450.

C. All manufacturers submitting network equipment for review and consideration should pay specific attention to Section 4 of ATT-TP-76450 for minimum alarm and interconnection requirements.

Synchronization

Equipment approved for use in the AT&T LEC network must be compliant to AT&T Services Synchronization standards. These requirements are contained in the AT&T-TP-76450. This document may be obtained from the AT&T Services internet web site at https://ebiznet.sbc.com/sbcnebs/.

VRLA Battery –

Prior to consideration for approval within the AT&T's network, all Valve Regulated Lead Acid Batteries must meet and be found compliant to GR-4228 – Level III; VRLA Battery String Certification Levels Based on Requirements for Safety and Performance.

Copyright ©2014, AT&T . All Rights Reserved.

1.14. *GES Common Systems Placement and Interconnection Standards*

Other AT&T Services physical and functional requirements pertaining to new equipment placement in and connection to AT&T facilities (e.g., dc power, cable routing and connections, etc.) are contained in ATT-TP 76450. This document may be obtained from the AT&T Services internet web site at https://ebiznet.sbc.com/sbcnebs/.

1.15. *Applicability of Other Publications*

All or part of equipment's requirements and objectives may be contained in other technical publications for some subjects. Unless otherwise stated in the text of this document all references to other publications are to their most current issue. When an industry standard is re-issued, conformance to requirements specifically cited within this publication that have been revised are immediately acceptable to AT&T. Conformance to the previous issue of the industry standard is acceptable for up to 6 months from the date of the new issue unless otherwise stated within this document.

1.16. *Reasons for Re-issue*

Changes to Issue: 19

The contents of this section are revised according to business objectives and the evolution of technology. The Reason for Reissue part of this section identifies the changes made to this document when it is revised. Sections:

Section: 1.6 Equipment Evaluation Process
Section: 1.11 Equipment Requirements
Section 6 Thermals
Section 9 Shock and Vibration
Section 10 Fire Resistance
Section 11 Spatial
Section 12 Physical Design and Manufacturing Requirements
Section 15.2 ESR-Form Description
Appendix A
Appendix A 16.11 Solder Joint Attestation

1.17. *Effective Date of this Issue*

Compliance to new or modified requirements added to this issue of ATT-TP-76200 will be required immediately.

Copyright ©2014, AT&T . All Rights Reserved.

1.18. *Comments*

Comments or questions regarding the content of this section should be directed to:

John Tablerion
Principle-product development engineer, NP&E-Globe Engineering Support
14345 Ridge Ave.
Orland Park Illinois 60462
Jt3216@att.com

Copyright ©2014, AT&T . All Rights Reserved.

2. Electromagnetic Compatibility

2.1. *GR-1089-CORE*

The electromagnetic compatibility and electrical safety requirements for Carrier Grade equipment are primarily stated in Telcordia publication GR-1089-CORE Electromagnetic Compatibility and Electrical Safety Generic Criteria for Network Telecommunications Equipment. The electromagnetic compatibility and electrical safety requirements for equipment located in the outside plant (OSP/CELL-SITE), including customer premises are primarily stated in Telcordia publication GR-3108-CORE, Generic Requirements for Network Equipment in the Outside Plant.

2.2. *Equipment Type*

The equipment supplier shall determine the Equipment Type and record the appropriate numerical equipment. To determine the Equipment Type, refer to GR-1089-CORE, Appendix B for all equipment. GR-1089-CORE provides guidelines for applying the aforementioned electromagnetic compatibility requirements. Application of the various criteria is a function of the type of equipment under consideration, its connection to the telecommunications network and the intended location of the equipment.

2.3. *Electromagnetic Interference*

A. **Carrier Grade Equipment** shall meet the radiated emission requirements stated in section 3.2 of GR-1089-CORE.

B. Outside Plant/Cell Site Equipment shall meet the radiated emission requirements stated in section 5.2.3 of GR-3108-CORE.

C. RF Transmitting Equipment. The use of radio frequency (RF) transmitting devices is restricted in and adjacent to network equipment areas, including Carrier Communication Space, Partitioned Network Space, and OSP/Cell site GR-3108 Class 1 CEV/HUT. Any equipment which includes an RF transmitting device that will produce RF energy in network equipment space shall be evaluated when any of the following conditions exist:

1. The equipment includes a radio frequency (RF) transmitter, strobe/flash, or arc discharge device
2. The equipment is capable of transmitting any type of information wirelessly via radio frequencies
3. The equipment includes an internal or external transmitting antenna

For each RF transmitting device which meets one or more of the above criteria, Form RFTX (15.17) must be completed and submitted. See Paragraph 15.6 for further explanation of this form.

Copyright ©2014, AT&T . All Rights Reserved.

NOTE: These requirements are in addition to other “leakage” RF emissions requirements such as those stated in Telcordia GR-1089 Electromagnetic Interference, "Electric Fields Radiated Emission Criteria for Intentional Radiators,” which reads "The limits apply to frequencies of unwanted emissions and not the fundamental [transmitted] frequency." In carrier grade network equipment areas, all significant emissions (intentional or unintentional) are "unwanted" and must be evaluated to assess the risk of disturbing other network equipment.

2.4. *Conducted Emissions*

A. **Carrier Grade Equipment** shall meet the conducted emission requirements stated in section 3.2 of GR-1089-CORE.

B. Outside Plant/Cell Site Equipment shall meet the conducted emission requirements stated in section 5.2.3 of GR-3108-CORE.

2.5. *Immunity*

A. Carrier Grade Equipment shall meet the immunity requirements stated in section 3.3 of GR-1089-CORE.

B. Outside Plant/Cell Site Equipment shall meet the immunity requirements stated in section 5.2.3 of GR-3108-CORE.

2.6. *Lightning and AC Power Faults*

A. Carrier Grade Equipment shall meet the applicable lightning and ac power fault requirements stated in sections 4 of GR-1089-CORE.

B. **Outside Plant/Cell Site Equipment** shall meet the applicable lightning and ac power fault requirements stated in section 5.2.4 of GR-3108-CORE. The equipment’s Port Type shall be determined using GR-1089, Appendix B.

C. Customer-Side Optical Network Terminals (ONTs) and Intelligent Network Interface Devices (iNIDs) Cable Ports placed at a customer premises shall have the electrical ports that interface with CPE defined as follows:

Ethernet and POTS – Type 4a for both lightning and AC power fault
Coax - considered Type 4a, but are tested as Type 4 ports.

Copyright ©2014, AT&T . All Rights Reserved.

2.7. *Steady State Power Induction*

A. Carrier Grade Equipment shall meet the steady state power induction requirements stated in section 5 of GR-1089-CORE.

B. **Outside Plant/Cell Site Equipment** shall meet the steady state power induction requirements stated in section 5.2.5 of GR-3108-CORE.

2.8. *Electrical Safety Criteria*

A. Carrier Grade Equipment shall meet the electrical safety requirements stated in section 7 of GR-1089-CORE.

B. Outside Plant/Cell Site Equipment shall meet the steady state power induction requirements stated in section 5.2.7 of GR-3108-CORE.

C. **When listing by an NRTL** is required by TP76200 for telecommunications equipment, the following requirement for listing shall be used

> Network communications equipment shall be listed as required by applicable codes, and customer requirements. The latest published codes such as the US/Canadian National Electrical Codes (NEC/CNEC), OSHA define when use of a listed product is required, and provide exemptions to the listing requirements if certain provisions are met. It is recommended that the equipment vendor consult with the service provider regarding specific listing requirements if there is any question.

2.9. *DC Potential Difference*

A. Carrier Grade Equipment shall meet the dc potential difference requirements stated in section 6 of GR-1089-CORE.

B. **Outside Plant/Cell Site** Equipment shall meet the dc potential difference requirements stated in section 5.2.6 of GR-3108-CORE

Copyright ©2014, AT&T . All Rights Reserved.

2.10 *Surge Protection Devices*

This section refers to primary protectors or standalone protectors, not secondary or tertiary protectors.

All such surge protectors deployed in the AT&T Network must be listed by a NRTL to the following standards:

Primary Protectors	UL 497
Secondary Protectors	UL 497A
Data Protectors	UL 497B
Coax Protectors	UL 497C
Antenna Lead in Protectors	UL 497E

In addition, all such surge protectors must also meet the requirements of the latest issue of either Telcordia GR 974,1361 or 3154.

Copyright ©2014, AT&T . All Rights Reserved.

3. Acoustic Noise

A. **Carrier Grade Equipment** shall meet the acoustic noise requirements as follows:

I. Level 3 -section 4.6 of GR-63-CORE Specifically Table 4-8 for equipment to be located in an attended room, i.e. 78 LWAd (dB)

II. Level 1:
Option 1 – Meet the Level 3 Requirement above
Option 2 - 73 dBA sound pressure, as measured according to ANSI ASA S12.12.10-2002, or a comparable standard.

B. OSP/CELL-SITE Equipment shall conform to Section 6.6 of Telcordia GR-3108

Note: Acoustic noise requirements do not apply to either CLECs or to Non Carrier Grade Level 1 equipment.

4. Electrostatic Discharge (ESD) and Electrical Fast Transients (EFT)

Carrier Grade and OSP/CELL-SITE equipment shall meet the requirements in this section.

4.1. *ESD Immunity Criteria*

Equipment shall meet the ESD immunity criteria requirements for normal operation and be tested for installation and repair objectives according to section 2.1.2 (ESD Immunity Criteria) of Telcordia's GR-1089-CORE, document. All tests shall be conducted as described in section 2.1.4 of GR-1089 and IEC Publication 61000-4-2.

4.2. *Special Requirements and Maintenance Information*

Any additional equipment-specific requirements in paragraph 2.1.2.4 of GR-1089-CORE shall be described in the report.

4.3. *Electrical Fast Transient (EFT)*

Equipment shall be tested in accordance with section 2.2 of Telcordia’s GR-1089-CORE, document with tests conducted as described in section 2.2.1.

Copyright ©2014, AT&T . All Rights Reserved.

5. Grounding

Carrier Grade and OSP/CELL-SITE equipment shall meet the requirements in this section.

5.1. *Bonding and Grounding Requirements*

Structures, equipment and power systems submitted for evaluation shall meet applicable Bonding and Grounding requirements of section 9 of GR-1089-CORE. For Ancillary reviews, only the short circuit test data of section 9.10 is required.

Copyright ©2014, AT&T . All Rights Reserved.

6. Thermal

6.1. General

Thermal management standards for AT&T equipment space are divided into three distinct categories:

- Temperature and Humidity
- Altitude
- Heat Dissipation

Each area has specific standards based on the level of compliance review requested. Typically Level 1 standards focus on personal and equipment safety. Level 3 compliance reviews build on the requirements in Level 1 and add network reliability standards.

6.2. Temperature and Humidity

A. Level 1 - Compliance Reviews

1) Carrier Grade/Non-Carrier Grade Equipment:

i. There are no reporting requirements.

2) OSP/Cell Site Equipment

i. Equipment shall conform to Telcordia GR-3108-CORE, Section 4.6.

B. Level 3 – Compliance Reviews

1) Carrier Grade/Non-Carrier Grade Equipment

i. Equipment shall conform to Telcordia publication GR-63-CORE, Section 4.1.1 and 4.1.2.

2) OSP/Cell Site Equipment

i. Equipment shall conform to the applicable requirements in GR-3108-CORE, Sections 4.1, 4.2, 4.3, 4.4, 4.5, and 4.6.

6.3. Altitude

A. Level 1 - Compliance Reviews

1. All Equipment Types

a. There are no reporting requirements

B. Level 3 - Compliance Reviews

1. Carrier Grade/Non-Carrier Grade Equipment

a. Equipment shall conform to Telcordia publication GR-63-CORE, Section 4.1.3.

2. Outside Plant/Cell Site Equipment

a. Equipment shall conform to Telcordia publication GR-3108-CORE, Section 4.7.

Copyright ©2014, AT&T . All Rights Reserved.

6.4. Heat Dissipation

A. General Information

AT&T utilizes both the nominal (normal operating) and maximum heat values (use Watts vs. BTU) for equipment when designing equipment space infrastructures. The nominal heat value is the primary driver of cooling requirements. Heat values are documented on the ESP form and, where required, on the ATIS charts.

ATIS heat reporting charts provide five (5) points of heat. This information provides a more detailed understanding of the overall equipment cooling demand.

- **Values entered into ESP and ATIS forms may be measured and/or calculated values.**

The configuration of equipment deployed in OSP/CELL-SITE cabinets must be approved by OSP/CELL-SITE staff prior to approval for use.

B. Level 1 - Compliance Reviews

1. Carrier Grade/Non-Carrier Grade Equipment

a. Equipment shall conform to Telcordia publication GR-63-CORE, Section 4.1.6.

2. Outside Plant/Cell Site Equipment

a. Equipment shall conform to Telcordia publication GR-3108-CORE, Section 4.2.

C. Level 3 - Compliance Reviews

1. Carrier Grade/Non-Carrier Grade Equipment

a. Equipment shall conform to Telcordia publication GR-63-CORE, Section 4.1.6.
b. Manufacturer shall document on ATIS Chart 1 the five (5) equipment heat levels.

2. Outside Plant/Cell Site Equipment

a. Equipment shall conform to Telcordia publication GR-3108-CORE, Section 4.2.
b. Manufacturer shall document on ATIS Chart 1 the five (5) equipment heat levels.

D. ESP Form – Heat Dissipation Data Reporting – All Equipment Types/ Review Levels

1) General

Section 6 heat dissipation results shall be stated on ATT-TP-76200 form ESP-001 or ESP-002 for individual units and maximum configured systems.

Copyright ©2014, AT&T . All Rights Reserved.

2) Reporting

ATT-TP-76200 Form ESP-001/002 (page 2) shall be used to report:

a. Nominal Heat – Typical operating conditions with AT&T card/traffic load
b. Maximum Heat – This is typically the heat associated with the equipment at maximum power draw.

E. ATIS Table 1 – Heat Dissipation Data Reporting – Level 3 Reviews / All Equipment Types

1) General

In addition to the ESP form, ATIS Table 1 Heat Dissipation Summary in Watts shall be submitted. The table is found in the Alliance for Telecommunications Industry Solutions: ATIS- 0600010.03.2011 Heat Dissipation Requirements for Network Telecommunications Equipment).

The document may be downloaded for a fee from the ATIS website http://www.ATIS.org. The document is copyright protected so it is not included in this standard. Refer to the ATIS site for information on access and downloading of ATIS tables. The ATIS document provides specific information and examples on how to complete each table.

The intent of Table 1 is to provide heat dissipation at different operating points from 0% (sleep mode), to Idle (no traffic estimated 25%) up to 100% maximum for the equipment. It is expected that the 50% (nominal) and the estimated 75% (full load) entries will provide critical information for cooling system planning purposes. The 50% (nominal) operating point will typically be the same figure provided on the ESP form nominal (Total). The 100% (maximum) operating point will typically be the same figure provided on the ESP form maximum (Total).

Copyright ©2014, AT&T . All Rights Reserved.

Table 1 - Heat Dissipation Summary (Watts)[4,5]

	Device[6]	(Sleep), 0%	(Idle), 25%	(Nominal), 50%	(Full Load), 75%	(Max), 100%	Optional
1	Device	N/A	23.12 - M	83 - M	103 - C	120 - C	
2	Device	N/A	29.41 - M	50 - M	51 - C	52 - C	
3	Device	N/A	31.22 - M	40 - M	60 - C	80 - C	
4	Device	N/A	33.88 - M	55 - M	70 - C	83 - C	
5	Device	N/A	9.56 - M	20 - M	21 - C	23 - C	
6	Device	N/A	57.49 - M	191 - M	215 - C	240 - C	
7	Device	N/A	13.69 - M	28 - M	29 - C	30 - C	
8	Device	N/A	23.12 - M	83 - M	103 - C	120 - C	
9	Device	N/A	57.49 - M	191 - M	215 - C	240 - C	
10	Device	N/A	13.69 - M	28 - M	29 - C	30 - C	
11	Device	N/A	57.49 - M	191 - M	215 - C	240 - C	
12	Device	N/A	13.69 - M	28 - M	29 - C	30 - C	
13	Device	N/A	378.44 - M	416 - M	460 - C	500 - C	
	Total	N/A	**742.29**	**1404**	1600	**1788**	

Figure 6.2 - ATIS – Chart 1 – Heat (Example)

6.5. Surface Temperature

A. All Level Reviews

1. Carrier grade/Non-Carrier Grade Equipment

a. Equipment shall conform to Telcordia publication GR-63-CORE, Section 4.1.7.

2. OSP/Cell Site Equipment

a. Equipment shall conform to Telcordia publication GR-3108, Section 4.2.2.

6.6. Air Flow

A. Level 1 - Compliance Reviews

1. Carrier Grade/Non-Carrier Grade Equipment

a. Manufacturer shall document on the ESP form that the equipment is either:
   i. Cooled via electric motor – fan forced, or
   ii. Cooled via convection, or
   iii. Other

b. Manufacturer shall document on the ESP form that the air flow(s) of the equipment are:
   i. Standard – Front to Rear

Copyright ©2014, AT&T . All Rights Reserved.

ii. Non Standard – Other than Front to Rear
iii. Multiple-Mixed paths

2. OSP/Cell Site Equipment

a. Manufacturer shall document on the ESP form that the equipment is either:
   i. Cooled via electric motor – fan forced, or
   ii. Cooled via convection, or
   iii. Other

b. Manufacturer shall document on the ESP form that the air flow(s) of the equipment are:
   i. Standard – Front to Rear
   ii. Non Standard – Other than Front to Rear
   iii. Multiple-Mixed paths

c. Equipment shall conform to Telcordia publication GR-3108 Section 4.2.1.2

B. Level 3 – Compliance Reviews

1. Carrier Grade Equipment

a. Manufacturer shall document on the ESP form that the equipment is either:
   i. Cooled via electric motor – fan forced, or
   ii. Cooled via convection, or
   iii. Other

b. Manufacturer shall document on the ESP form that the air flow(s) of the equipment are:
   i. Standard – Front to Rear
   ii. Non Standard – Other than Front to Rear
   iii. Multiple-Mixed paths

c. Equipment shall conform to Telcordia publication GR-63-CORE, Section 4.1.8 inclusive of O4-35 and O4-36

d. Manufacturer shall document on ATIS Chart 2 (see Figure 6.5 below) the equipment air flow paths and velocity

2. OSP/Cell Site Equipment

a. Manufacturer shall document on the ESP form that the equipment is either:
   i. Cooled via electric motor – fan forced, or
   ii. Cooled via convection, or
   iii. Other

Copyright ©2014, AT&T . All Rights Reserved.

b. Manufacturer shall document on the ESP form that the air flow(s) of the equipment are:
   i. Standard – Front to Rear
   ii. Non Standard – Other than Front to Rear
   iii. Multiple-Mixed paths

c. Equipment shall conform to Telcordia publication GR-3108 Section 4.2.1.3

C. Airflow Data Reporting

1. All Equipment Types and Level Reviews

a. ESP Form Airflow Reporting Convention

Manufacturer shall provide positive air flow entries on the applicable ESP Form for designations of equipment following the convention identified in below. Where more than one airflow path is present, a separate reference shall be provided for each path.

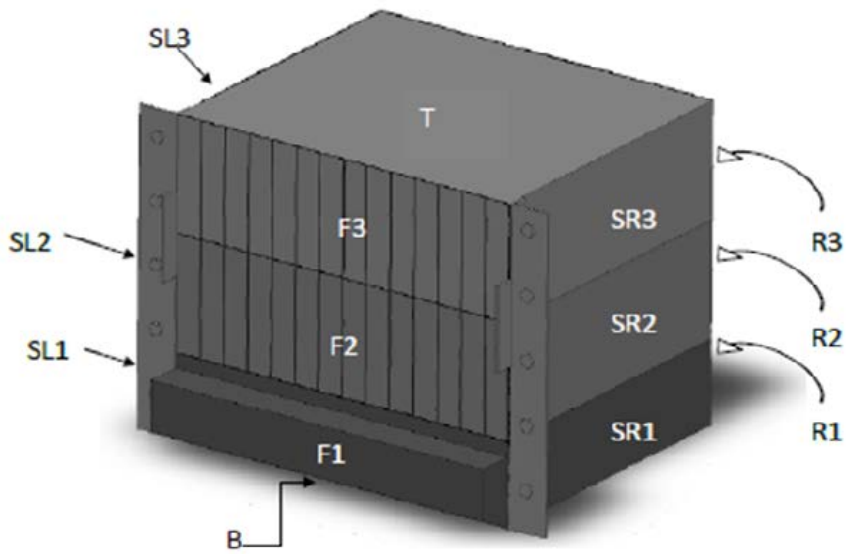

Figure 6.3 - Air Flow Designations

b. ESP Form Airflow Path Reporting

Manufacturer shall state **Yes** for item Air Flow Path Design on Form ESP-001/2 if cooling air flow of your equipment adheres to this cooling scheme. Air flow paths other than F(X)-R(X) (or BXT for OSP) require answering this question with a **No** (*see* **Figure 6.4 - ESP – Path Designations**.

Copyright ©2014, AT&T . All Rights Reserved.

i. Manufacturer shall enter the respective airflow path(s) in the space provided adjacent to the Yes or No indicator on Form ESP-001/2.

ii. Where more than one path exists, separate each path with a comma (e.g., F1-R3, F2-R3).

iii. Other cooling methods shall be explained with a statement included as attachment to Form ESP-001/002.

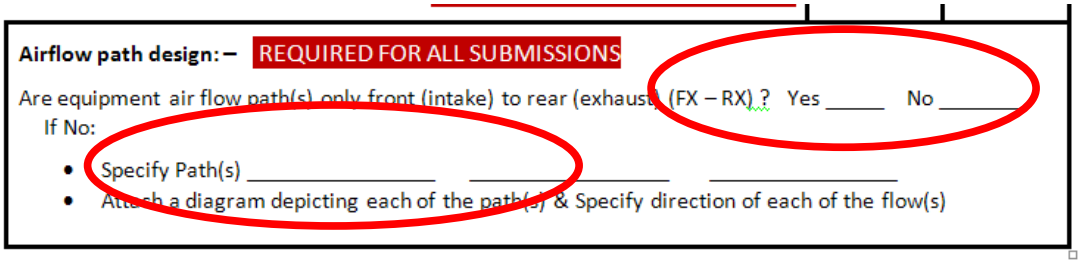
Airflow path design: – REQUIRED FOR ALL SUBMISSIONS

Are equipment air flow path(s) only front (intake) to rear (exhaust) (FX – RX) ? Yes _____ No _____

If No:

- Specify Path(s) _____ _____ _____
- Attach a diagram depicting each of the path(s) & Specify direction of each of the flow(s)

Figure 6.4 - ESP – Path Designations

c. ESP Form - Non-Standard Airflow Path Reporting

Equipment cooling airflow designs other than front to rear/top (or BXT for OSP) are considered non-preferred (e.g., side flow, etc.).

i. Equipment with non-preferred air flow path(s) will no longer be considered for approval unless submitted with an integrated / attached air flow redirection solution which effectively adjusts the air flow to the standard front to rear requirement.

ii. Equipment with non-preferred air flow path(s) will be considered by ATT Services; however non-preferred flow equipment will be considered on a case by case basis and will require deployment restrictions or equipment revisions prior to deployment.

Specifically, side to side air flow (e.g., SR2-SL2, etc.) and bottom to top airflow (e.g., B-T) (Equipment for Mobility remote offices accepted) shall require air deflection units as part of the equipment deployment to affect the change of air flow to front to rear.)

2. ATIS Table 2 Airflow Reporting - General

The ATIS Table 2 Airflow Measurements source information is found in the same ATIS document (ATIS- 0600010.03.2011 Heat Dissipation Requirements for Network Telecommunications Equipment) described in Section 6.4.E above.

Copyright ©2014, AT&T . All Rights Reserved.

The intent of ATIS Table 2 is to provide additional information of the velocity(ies) and direction(s) of the exhaust air of the equipment. These entries provide critical information for cooling system planning purposes.

Table 2 • Airflow Measurements

		(Sleep) 0% *(Measured)*	*(Idle)* **25%** *(Measured)*	*(Nominal)* **50%** *(Measured)*	*(Full Load)* **75%** *(Measured or Calc.)*	*(Max)* **100%** *(Measured or Calc.)*
1	**DEVICE** Dimensions (WxHxD) inches			W=19.0" H= 5.2" D=16.2"		
2	**INTAKE** • Location(s) • Dimensions (WxH) inches			A) F2 B) C) W=4.88" H=2.48"		
3	**EXHAUST** • Location(s) • Dimensions (WxH) inches			A) R2 B) C) W=4.88" H=2.48"		
4	**EXHAUST** • Angle 0 = Horizontal			A) 0 degrees B) C)		
5	**EXHAUST** Volume ft^3/min	A) 0 CFM B) C)	A) 33.6 CFM B) C)	A) 60.0 CFM B) C)	A) 88.2 CFM B) C)	A) 109.6 CFM B) C)
6	**EXHAUST** Velocity ft/min	A) 0 FT/MIN B) C)	A) 400 FT/MIN B) C)	A) 714 FT/MIN B) C)	A) 1048 FT/MIN B) C)	A) 1304 FT/MIN B) C)
7	**TEMP** Shelf/Frame	25 C				

Figure 6.5 - ATIS – Chart 2 – Air Flow

Copyright ©2014, AT&T . All Rights Reserved.

7. DC Power

The following requirements are referenced from, but not limited to, the most recent ATIS-0600315. Test reports showing conformance to all objectives in GR-1089-CORE Section 10 will be accepted as demonstrating conformance to respective requirements in 7.1 through 7.8 of this Section (ATT-TP-76200 Section 7)

All DC powered Carrier Grade network equipment deployed in Network Equipment Spaces and Outside Plant/Cell Site shall meet the requirements of this section.

The requirements in this section are for nominal -48 VDC Network Elements operating in a steady state voltage range of -40 VDC to 56.7 VDC per Table 1 of ATIS-0600315.

NOTE: AT&T Services may have other DC Power requirements including but not limited to those referenced in ATT-TP-76450, Telcordia's GR-499-Core and GR-513-Core.

Unless otherwise stated, all requirements shall apply to the dc power input terminals of the telecommunications load equipment. Although systems vary in architecture, all tests in this standard shall be performed with the minimum number of power supply modules installed in the system that can be utilized in practice (except for the noise return tests). For instance if a system has a redundant power supply module(s), all the redundant supply modules shall be disabled or removed during the tests in this standard (unless they physically cannot be removed or disabled when the equipment is deployed). In addition, for systems with multiple feeds such as "A" and "B", power is only supplied to one feed during the tests in this standard.

7.1. *Steady-State Input DC Voltage Requirements*

The telecommunications load equipment shall meet its operational requirements at any input voltage of the correct polarity between and including the minimum and maximum values specified in Tables 1 in ATIS-0600315.

7.2. *Undervoltage Requirements*

Equipment shall operate properly when exposed to steady state undervoltage conditions and shall comply with the conformance criteria as described in ATIS-0600315.The equipment supplier shall provide a report containing the test methods and results for the above requirement.

Copyright ©2014, AT&T . All Rights Reserved.

7.3. *Minimum Operating Voltage*

Specify the minimum voltage at which the equipment remains fully operational and verify the equipment will recover to a fully operational state after losing power.

7.4. *Current Drains*

7.4.1 List 1 Current Drain

The List 1 current drain, for a maximum configuration of cards and shelves, shall be provided in amperes on the appropriate ESP form. List 1 drain is the average busy-hour current at normal voltage and operating conditions.

7.4.2 List 2 Current Drain

The List 2 current drain, for a maximum configuration of cards and shelves, shall be provided in amperes on the appropriate ESP form. List 2 drain is the peak current during emergency operating limits of the EUT and with normal operating conditions (no short circuits or other malfunctions).

7.5. *Overvoltage Requirements*

Telecommunications load equipment shall not be permanently damaged or permanently have its performance degraded when an input voltage of correct polarity, with a value between 0 V and the maximum voltage level for each nominal voltage plant specified in Tables 1 of ATIS-0600315. is applied for any period of time.

Equipment shall operate properly when exposed to steady state overvoltage conditions, shall comply with the conformance and test results shall be recorded in a test report as described in ATIS-0600315.

7.6. *Overvoltage Transient Requirement*

Equipment shall operate properly when exposed to an overvoltage transient condition , shall comply with the conformance criteria and test results shall be recorded in a test report as described in ATIS-0600315.

7.7. *Protective Device Operation Transient*

Equipment shall operate properly when exposed to transient conditions, shall comply with the conformance criteria and test results shall be recorded in a test report as described in ATIS-0600315. Testing methods shall be utilized to ensure prevention of malfunction or damage.

7.8. *Electrical Noise Requirements*

7.8.1 Noise immunity

Copyright ©2014, AT&T . All Rights Reserved.

Equipment shall operate properly when exposed to electrical noise, shall comply with the conformance criteria and test results shall be recorded in a test report as described in ATIS-0600315. Voiceband noise shall only apply to equipment with analog voiceband ports effective with GR-1089-CORE.

7.8.2 Noise returned by the telecommunications load equipment

Equipment shall not return excessive noise onto the DC power system, the equipment shall comply with the conformance criteria and test results shall be recorded in a test report as described in ATIS-0600315. Requirement 5.6.2.1, Voice Frequency Noise Requirements are no longer required effective with GR-1089-CORE Issue 6.

8. Airborne Contaminants

8.1. *Controlled Environments*

Equipment intended for installation in controlled environment spaces shall meet the Airborne Contaminants requirements for indoor equipment as stated in section 4.5 of GR-63-CORE.

A. **Carrier Grade Equipment** shall conform to the MFG test performed for 14 days as detailed in Telcordia GR-63, Issue 3.

B. **OSP/CELL-SITE** Huts, CEVs and sealed GR-487-type cabinets are considered a controlled environment and shall conform to the MFG test performed for 14 days as detailed in Telcordia GR-63.

8.2. *Uncontrolled Environments (OSP/CELL-SITE)*

A. Equipment intended for use in **Class 2, 3 and 4** OSP environments (i.e., unsealed cabinets installed on pads or poles) with no filtration shall meet GR-63-CORE, OSP Airborne Contaminants requirement R4-100, Section 4.5.2.1 for outdoor equipment.

B. Equipment intended for use in sealed Class 2 cabinets shall meet GR-63 indoor Airborne Contaminants requirements.

C. **Class 4** Equipment shall meet the Salt Fog Exposure requirements of GR-3108-CORE, Section 6.1.

Copyright ©2014, AT&T . All Rights Reserved.

8.3. *Fan Filter Requirements*

A. **Carrier Grade *Equipment*** larger than 1U located indoors, except for power source equipment (e.g. rectifiers, etc.) shall conform to the fan filter requirements contained in GR-63-CORE

B. *Carrier Grade* Equipment ***1U or smaller located indoors will be accepted without fan filters.***

C. **OSP/CELL-SITE Equipment**

Network Elements and/or other electronic equipment deployed inside GR-487 compliant cabinets with a:

I. GR-3108 Class 1 compliant environment shall be equipped with fan filters that meet or exceed the requirements of Telcordia GR-63-CORESection 4.1.5.2 requirements for air filters.
II. GR-3108 Class 2 compliant environment shall not be equipped with fan filters.
III. GR-3108 Class 3 compliant environment shall not be equipped with fan filters.
IV. **GR-3108 Class 4 compliant environment is N/A**.

D. GR-63-CORE, Objective 04-25 for fan filter alarms shall be a requirement.

Copyright ©2014, AT&T . All Rights Reserved.

9. Shock and Vibration

Equipment shall conform to the requirements in this section except where specified.

9.1. Handling and Transportation - Shock

All Compliance Reviews: Network equipment shall be designed with tolerance for shock of transportation and handling from manufacturer's facilities to job sites without sustaining physical damage or affecting functional performance.

A. Carrier Grade / Non-Carrier Grade application: The manufacturer shall be in compliance to handling and transportation shock requirements specified in Telcordia document GR-63-CORE. Equipment test documentation may not be requested with the understanding that the equipment manufacturer is responsible to assure receipt of acceptable and functional equipment to the job sites.

B. Outside Plant / Cell Site application
   1) The manufacturer shall be in compliance to transportation vibration requirements specified in Telcordia document GR-3108-CORE, Section 6.3.1.5.
   2) OSP / CELL-SITE equipment that weighs 220 lbs (100 kgs) or less shall conform to the Drop Test requirements GR-3108-CORE, Section 6.3.1.4.

9.2. Handling and Transportation - Vibration

1. All - Compliance Reviews:
   a) Network equipment shall be designed with tolerance for transportation and handling from manufacturer's facilities to the job site without sustaining physical damage or affecting functional performance as specified in GR-63-CORE. AT&T Services may not require test documentation with the understanding that the equipment manufacturer is responsible to assure receipt of acceptable and functional equipment to the AT&T job site.

9.3. *Seismic - Vibration*

A) Level 1- Compliance Reviews:
   a. Carrier Grade / Non-Carrier Grade application: Equipment does not require earthquake tests to be conducted; however, equipment shall be installed in framework suitable for resisting earthquake loads and framework secured appropriately to building.

Copyright ©2014, AT&T . All Rights Reserved.

b. Outside Plant / Cell site application: Equipment does not require earthquake tests to be conducted; however, equipment shall use mounts suitable for resisting earthquake loads. Network equipment intended for outside plant / Cell site applications and designed in accordance to GR-3108 will be in conformance following requirements of Carrier Grade equipment.

B) Level 3 - Compliance Reviews:

a. Carrier Grade / Non-Carrier Grade application: Network equipment shall be designed for service in high seismic risk locations. Equipment shall demonstrate conformance to Telcordia GR-63-CORE, or ATIS-0600329 earthquake requirements by having equipment assembly tested on shake table and submitting documentation of successful test results.
b. Outside Plant / Cell site application: Equipment shall be designed for service in high seismic risk locations. Equipment shall demonstrate conformance to Telcordia GR-3108-CORE, Section 6.3.2 earthquake requirements by having equipment assembly tested on shake table and submitting documentation of successful test results.

9.4 Positive Latching

All network equipment shall have circuit pack latches or retainers to prevent pack and module walkout. Ejectors are not retainers and should not be used for that purpose.

9.5 Hard Drive Backup

Hard drive storage units used with network equipment shall be designed with tolerance for shock and vibration by physical isolation of drives, backup systems or self-recovery capabilities to assure service integrity.

9.6 Standard Frame

Network equipment shall be designed for mounting in telecommunications industry standard framework, relay racks. However, equipment deeper than 12 inches, heavier than 400 pounds or designed for special housings may require framework other than standard relay racks. For safety consideration, a loaded framework during transport or on site awaiting installation should temporarily be able to stand upright on its own when not secured. If weight distribution of equipment in framework results in framework falling backward or forward, special deeper framework is to be provided.

9.7 Shelf Support Frame

All network equipment assemblies 7’-0” tall and under shall be designed for freestanding installation in AT&T equipment areas. Freestanding is defined as framework not secured overhead but with provisions for floor anchors of appropriate size and quantity to secure equipment from overturning under worst-case site conditions.

Copyright ©2014, AT&T . All Rights Reserved.

9.8 Office Vibrations

All – Compliance Review:

a. Carrier Grade / Non-Carrier Grade application: Network equipment shall be designed for operation under office vibration conditions specified in Telcordia document GR-63-CORE. AT&T Services may not request test documentation with the understanding that the equipment manufacturer is responsible to assure operational reliability for conditions that may exist in AT&T equipment locations
b. Outside Plant / Cell site application: Equipment intended for outside plant applications shall be designed and tested in accordance to Telcordia GR-3108 paragraph 6. 3.3 Low Level Vibration Resistance test procedures. The low level vibration resistance tests differ from GR-63-CORE tests, instead GR-3108 follows ETSI EN 300 019 for IEC Class 4M5 test standards.

9.9 Floor Loading

Floor loading requirements specified in Telcordia document GR-63-CORE shall not be exceeded. The manufacturer shall consider the worst case configuration of heaviest arrangement within a single framework when analyzing floor load. The configuration may need to include weight within a frame contributed from equipment supplied by others.

Copyright ©2014, AT&T . All Rights Reserved.

10. Fire Resistance

Equipment shall conform to the requirements of this section.

10.1. *Minimum Fire Resistance*

This part provides the minimum fire resistance requirements for equipment and apparatus intended for installation in the network equipment facilities. All equipment shall be tested or otherwise evaluated for compliance with the fire resistance criteria provided in this part.

10.2. *Auxiliary Equipment*

Full compliance of the requirements in this document do not apply to auxiliary monitoring equipment such as oscilloscopes, personal computers, portable test equipment, etc., which are not integral to the equipment. However, such auxiliary equipment must have either UL listing or be ATIS-0600307 compliant.

10.3. *Materials/Components*

The materials and components used in the construction and interconnection of equipment shall comply with the most current issue of ATIS-0600307. Generally, materials and components shall be constructed of polymeric materials having an oxygen index of 28% or greater and a fire resistance characteristic equivalent to or better than Under Writers Laboratories (UL) standard UL 94 V-1. Cable and wire shall generally be listed for their purpose.

10.4. *Protective Barriers*

Exposed nonmetallic equipment frame components such as protective covers, viewing panels, etc. shall comply with the ancillary materials requirements of ATIS-0600307Fire Spread.

A) All – Compliance Reviews
   a. Carrier Grade Equipment application: Shall comply with the appropriate fire spread performance criteria provided in Telcordia GR-63-CORE.
   b. Non-Carrier Grade application: Equipment shall be listed by a Nationally Recognized Testing Laboratory (NRTL).
   c. OSP / Cell – Site application: Equipment for Class 2, 3 and 4 environments shall comply with the fire resistance criteria of Telcordia GR-3108-CORE, Section 6.5.

Copyright ©2014, AT&T . All Rights Reserved.

10.5. *Fire Test Video*

In general, a fire test video is **not required** as part of the test report submittals. However, a fire test video may be required when the documented test results as provided by the Testing Lab are incomplete or inconclusive to make a reasonable evaluation of the product compatibility with the GR-63-CORE requirements.

11. Spatial

A. Carrier Grade Equipment installed in **Carrier Communications Space** shall meet the following requirements.

11.1. *General*

This part provides the physical requirements for equipment units, and equipment systems intended for use in indoor network equipment areas. This part does not apply to power equipment or office distributing frames, and is not applicable to equipment intended solely for use in outdoor equipment enclosures, or controlled environment vaults. The equipment covered would typically be rack mounted in two or four post framework intended for environmentally controlled environments. The equipment framework if provided by the equipment manufacturer shall be approved by AT&T and in conformance to AT&T performance and dimensional requirements.

Form ESP-001 and/or ESP-002, physical data and engineering data shall be completed to include dimensional and weight data on equipment covered in this section.

11.2. *Equipment System*

The word **system** as used in this part refers to multi-unit and multi-frame equipment configurations that collectively perform one or more telecommunications or data management functions. System equipment is normally furnished preinstalled in one or more equipment framework assemblies.

11.3. *Equipment Unit*

The term equipment **unit** as used in this part refers to stand alone products that are generally field mounted by equipment users. An equipment unit may also be known as a shelf, card cage, chassis or apparatus as defined in ATIS documents. The unit will basically be a mechanical structure designed specifically to support associated electrical and electronic components. The unit shall be designed for vertical rack mounted in two or four post frameworks of industry standard widths.

Copyright ©2014, AT&T . All Rights Reserved.

11.4. *Framework and Equipment Requirements*

A. Equipment and framework intended for legacy environments of two post framework lineups:

a. Framework shall be designed for freestanding configuration not requiring overhead support with maximum height of 7'-0". Framework base shall have provisions for floor anchoring of anchor hardware up to 18mm diameter and capabilities for repositioning anchors at minimum of 1" to avoid rebar. AT&T requirements require all framework to be designed and tested for Zone 4 service.

b. Equipment unit shall be designed for 23" or 19" nominal width mounting and fit within uprights of a standard 23" width framework. Where 19" equipment is provided, mounting adapters shall be provided for installation in 23" width framework. (Limited applications of 19" nominal width framework are used and, if designated, equipment shall be designed to fit within 17-1/4" clearance between frame uprights.)

c. Framework should not exceed 2'-6" in overall width.

d. In legacy transport environments equipment and framework should **not** exceed 15" in depth when adding to existing lineups.

e. In newer technology lineups equipment and framework shall **not** exceed 24" in depth.

f. Should facilitate a nominal rear aisle of 2' 6" or greater and a nominal front aisle of 3' 0"or greater for equipment installation and maintenance purposes.

g. Where product requires additional cabling space adjacent to equipment framework, designate on form ESP-001 and/or ESP-002 under Engineering Data, Additional Space Requirements.

B. Equipment intended for four post framework installation lineups:

A. Framework shall be designed for freestanding configuration not requiring overhead support with maximum height of 7'-0". Framework base shall have provisions for floor anchoring of anchor hardware up to 18mm diameter and capabilities for repositioning anchors at minimum of 1" to avoid rebar. AT&T requirements require all framework to be designed and tested for Zone 4 service.

B. Equipment unit shall be designed for 23" or 19" nominal width mounting and fit within uprights of a standard 23" width framework. Where 19" equipment is provided, mounting adapters shall be provided for installation in 23" width mounting rail configuration.

C. Framework width shall be designed for maximum 30" width.

D. Framework depth shall be designed for 24" to 36" depth.

Copyright ©2014, AT&T . All Rights Reserved.

E. Doors, slide drawers should not require more than 30 inches space into aisles to use.

F. Four post framework shall allow for room ventilation air to freely enter and exit enclosure. Doors, side panels, blanking panels and top panels shall be designed for controlled front to rear air flow if provided.

11.5. *Equipment Floor Loading*

An individual framework loaded with equipment shall be designed and constructed to floor load requirements of less than 560 kg/m^2 (114.7 lb./ft^2) The floor loading for an equipment framework is calculated by dividing the frame weight by the area of a rectangle bounded by the extended frame sides and half of the front (3 ft -0 in. or 18 in) and half of the rear (2 ft.-6 in. or 15 in.) aisles. The standard framework footprint to be used in AT&T calculations would be 26 in. wide and 24" deep. For four post frameworks use footprint dimension of framework and same front and rear aisle dimensions. Total weight of equipment should include all cables that may be required in normal field installation.

11.6. *Equipment Units*

Equipment units:

A. Shall be designed so they are installed from the front and cabled from the rear of equipment framework assemblies,

B. Shall incorporate the use of holes or closed slots in mounting hardware for attachment to equipment framework mounting surfaces, and be designed for 23" nominal width framework,

C. Shall accommodate mounting in equipment frameworks using the 1-3/4 x 23 inch mounting hole pattern shown in Figure 11-1, and

D. Limited applications of products that will not permit rear access will require that equipment be designed strictly for front access where cabling, maintenance and normal service be performed from front only. These products shall be designed for front access and indicated on form **ESP-001** and/or **ESP-002** , **Engineering Data**, **Equipment Locating Restrictions** as **YES**, "**Front Access Only**" Only those products intended for limited applications such as CEV installations, ETSI compliant products or other AT&T authorized use shall be designed for front access.

Copyright ©2014, AT&T . All Rights Reserved.

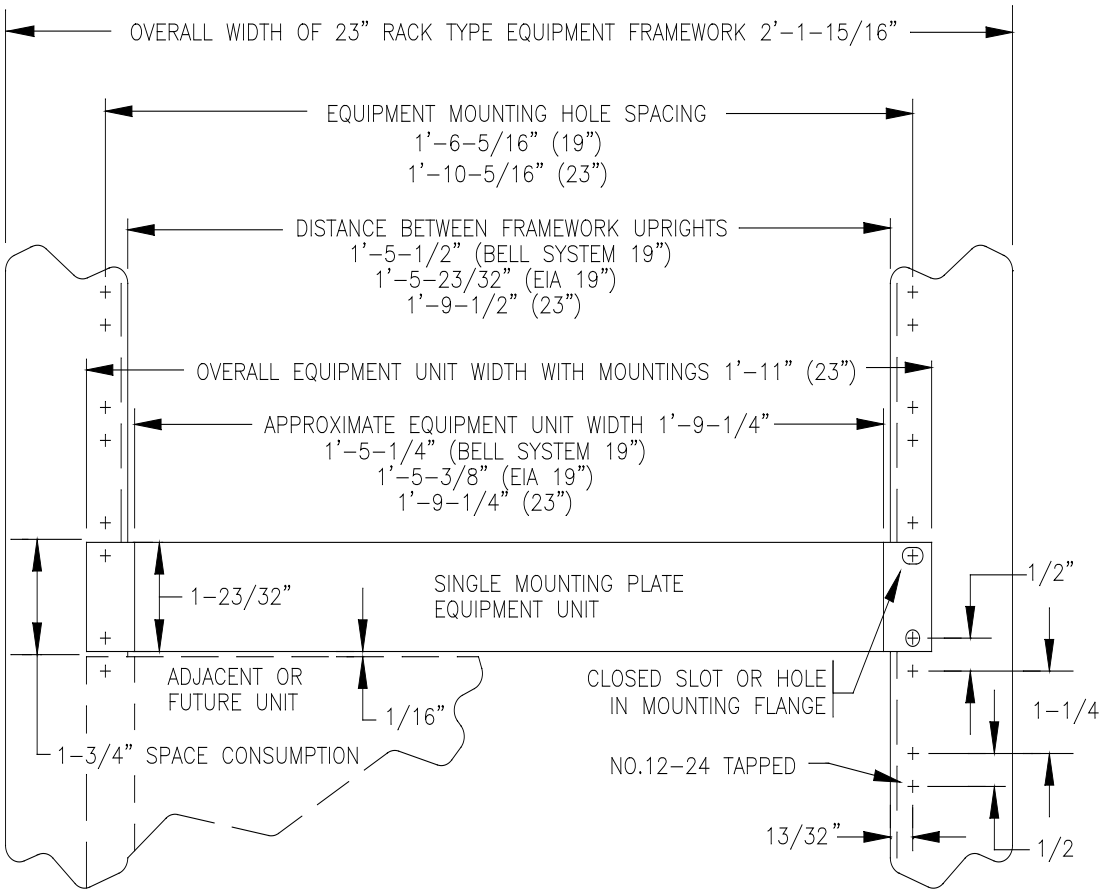

Figure 11 -1 - Commonly Referenced Equipment Spatial Considerations

Carrier Grade Equipment installed in **Network Equipment Space** shall meet the following requirements.

Copyright ©2014, AT&T . All Rights Reserved.

12. Physical Design and Manufacturing Requirements

12.1. Physical Design and Manufacturing

A. Vendor shall comply with the hazardous substances provisions contained in AT&T contract managed by procurement.

B. Equipment intended for use by AT&T outside of the United States shall meet Restriction of Hazardous Substances Sstandards that are applicable for use within the country it is deployed.

C. It is an objective that equipment manufacturing complies to Telcordia GR-78-CORE.

12.2. PB-free Solder Joint Reliability

This section is intended to identify Solder Joint Reliability (SJR) requirements for equipment manufactured with PB solder per ATIS-0600019 and ATIS-0600020 standards. These standards apply to electrical and electronics products, including, but not limited to telecommunications equipment, sold to AT&T.

Manufacturer shall complete Pb-Free Solder Declaration (PbF Form) paragraph 15.16, and forward to AT&T.

Per Telcordia Notice to the Industry, November 2006, Reliability Concerns with the use of Lead (Pb) Free Solder in Telecommunications Products and other sources there is continuing concern regarding the use of RoHS 6 compliant equipment for telecommunications applications that require long life and high reliability. RoHS compliant equipment and equipment components proposed for deployment in AT&T network shall need to demonstrate reliability of solder joints equal to or greater than that of RoHS 5 equipment.

Demonstration of reliability shall include:

1. Pb free sub-assembly modules (e.g., hard drives, PCI cards, transceivers, etc.) shall demonstrate compliance to ATIS standard *Test Requirements for Pb-Free Subassembly Modules* ATIS-0600019.
Vendor shall complete and return the checklist contained in Section 4.3 of the ATIS document.

Note: Pb-free SFP/XFP type modules are considered compliant to requirement and do not need to be submitted for review.

2. Pb free assemblies (e.g., circuit boards, etc.) shall demonstrate compliance to the ANSI standard *Guideline for Pb-Free Assembly Qualification and Test Requirements for*

Copyright ©2014, AT&T . All Rights Reserved.

Printed Wiring Board Assemblies, ATIS-0600020. Vendor shall complete and return the checklist contained in Section 4.3 of the ATIS document[1].

3. Copies of test reports for ATIS standards,

4. All reliability and failure rate information (e.g. FIT data) for the product for all previous and existing deployments regardless of service provider or geography.

5. Pb-free soldered equipment will be evaluated for approval by AT&T on a case-by-case basis weighing compliance to the above requirements and other risk factors. For example, deployment in an OSP/CELL-SITE environment, use of large high strain components (e.g. ceramic BGAs), etc. indicate a higher risk of solder joint failure for RoHS 6 equipment, while small plug-in sub-assembly components may pose lower reliability risks.

6. A Solder Joint Reliability Letter of Attestation verifying compliance to ATIS standards may be submitted in lieu of the above information. See Appendix A, 16.11. NOTE: The PCN process shall be used for all transitions of existing lead/tin soldered equipment to Pb-free.

13. Energy Efficiency Testing Requirements

13.1. Purpose

The purpose of this Section is to establish energy efficiency testing and reporting requirements based on standards developed and published by ATIS as ANSI standards. This is a suite of equipment specific documents based on the General Requirements Standard. At the present time there are four equipment standards in effect:

- ATIS-0600015.01.2009, Servers
- ATIS-0600015.02.2009, Transport
- ATIS-0600015.03.2009, Routers and Ethernet Switches
- ATIS-0600015.04.2010, Power Systems Rectifiers
- ATIS-0600015.06.2011, Radio Base Stations

13.2. ATIS Energy Efficiency Standards

ATIS-0600015.2009, Energy Efficiency for Telecommunication Equipment: Methodology for Measurement and Reporting General Requirements establishes the test methodology, environmental factors and utilization of the equipment for measuring the energy used in the formation of the Telecommunications Energy Efficiency Ratio (TEER). The procedures shall be applied in a controlled laboratory environment. Testing is to be performed at a third party test laboratory or by a representative from a company that operates an accredited test

Copyright ©2014, AT&T . All Rights Reserved.

laboratory. The supplier may also provide additional data for configurations different from those tested by the third party test laboratory.

13.3. Telecommunications Energy Efficiency Ratio

The following guidelines will be followed when defining TEER for equipment:

- The scale will be fully defined in the supplemental standards such that typical TEER values range from 1 to 1000.
- The higher the TEER value, the more energy efficient the equipment is compared to other like equipment.
- The supplemental standard will define the TEER calculation details.

TEER is the ratio of useful work over energy consumed, $TEER = \frac{UsefulWork}{P_{TEER}}$.

13.4. Application

The standards will be used to establish baselines for minimum acceptable energy efficiency of network elements. In addition to the General Requirements, the supplemental standards shall be used to create Telecommunication Energy Efficiency Ratios (TEER) by equipment type.

The equipment types are currently categorized as Core, Transport, Access, CPE, and Power Systems based on application and location in the network.

13.5. Standards Development

At the time of this issue, ATIS has several standards at various stages of development ranging from final editing, draft for review, to draft preparation. As ATIS publishes these and subsequent supplemental energy efficiency standards they shall be adopted first as objectives and finally as requirements in revisions of this Technical Publication.

13.6. Energy Efficiency Report

An Energy Efficiency Report shall be included in any new product evaluation for Carrier Grade Level 3. A sample TEER reporting form is available from ATIS-0600015.2009. In addition to this form, data as required for the specific equipment types covered by ATIS-0600015.01-.04 shall also be reported.

Copyright ©2014, AT&T . All Rights Reserved.

14. Outside Plant/Cell Site Deployment Configurations and Enclosures

14.1. Deployment Configurations

The configuration of equipment deployed in OSP/CELL-SITE cabinets shall be approved by OSP/CELL-SITE staff prior to approval. OSP/CELL-SITE contact:

Jason Neal
2600 Camino Ramon
San Ramon CA, 94583Phone: (925)823-2736
e-mail: jn6729@Att.com

14.2. *OSP/CELL-SITE Enclosure*

Reference the **ATT-TP-76205 AT&T Electronic Equipment Enclosure / Cabinet (EEE/C) Standard for applicable requirement and process.**.
(https://ebiznet.sbc.com/sbcnebs/)

This section does not cover Huts and CEVs. For verification of test requirements for OSP/CELL-SITE cabinets and other enclosures contact Jason Neal at (925) 823-2736.

15. Equipment Information Form Description

15.1. *General*

This section includes equipment information forms to help suppliers communicate equipment information in a way that will facilitate the equipment evaluation process. These equipment information forms may be reproduced as necessary. The equipment information forms shall be completed and provided for new equipment and for enhanced equipment already approved for use in AT&T.

15.2. *ESR Form Description*

The ESR *Equipment Supplier Requirements Checklist* forms are provided so equipment suppliers can have a checklist of requirements for each level of conformance.

An ESR form is no longer required for AT&T TP-76200 Evaluation as part of the documentation package.

15.3. *ESP Form Description*

The engineering and space planning forms provide a detailed overview of the planning and engineering considerations associated with products being evaluated. *System*

Copyright ©2014, AT&T . All Rights Reserved.

Equipment form ESP-001 applies to products comprised of multiple equipment units installed in a predefined configuration. Such products may be furnished preinstalled in an equipment framework assembly (frame level) or as shelf level products (individual units) for installation into existing equipment framework assemblies. *Equipment Unit* form ESP-002 applies to stand-alone shelf level products.

Suppliers shall complete an ESP-001 form for frame level products, each frame of multi-frame products, and for shelf level products that are optionally available preinstalled in an equipment framework assembly. The ESP-002 form shall be completed for individual shelf level products.

15.4. *FRM Form Description*

Form FRM-001 *Fire Resistance of Materials* shall be completed by the product supplier's representative having explicit knowledge of the subject addressed. The FRM form may be used for multi-unit products provided each individual unit comprising the product is specifically referenced in the space provided.

15.5. *PbF Form Description*

Form PbF, shall be completed by equipment supplier’s representative having explicit knowledge of the subject addressed. The PbF Form may be used for multi-unit products provided each individual unit comprising the equipment is specifically referenced in the space provided.

15.6. *RF Transmitter Form Description*

Form RFTX, *Radio Frequency Transmitting Device Characteristics*, shall be completed by a product supplier's representative with explicit knowledge of the RF characteristics of any device which transmits RF energy. See Section 1.9 and 2.3.C for criteria to determine when this form is required. Complete one form for each unique transmitter and radiator (antenna) combination, or optionally provide tabulated information as an attachment if several transmission devices are involved. Reproduce Form RFTX as needed. Provide attachments from the manufacturer or an accredited testing laboratory (see Section 1.12) documenting the RF emissions levels stated.

Equipment Information Forms:

NOTE: See following pages:

Copyright ©2014, AT&T . All Rights Reserved.

15.7. ESP-001 Form

EQUIPMENT ENGINEERING & SPACE PLANNING DATA

Equipment Systems (1)

Manufacturer:_____ Product Name:_____ Date:_____

Equip. Functional Description and Nomenclature: _____

Floor Plan Designation: _____Number of Frames Per System: _____

Names of Associated Frames: _____

PHYSICAL DATA (2)

Overall Dimensions Including Framework: Height: _____ Width (3): _____ Depth: _____

Equipment Weight: –Approximate Installed Weight (fully equipped) _____ lbs _____ lbs.

ENGINEERING DATA (2)

Framework Type/Description: _____

Manufacturer's Identifying Catalog/Part Number: _____

Minimum Aisle Spacing Requirements: Front: _____ Rear: _____

Additional Space Requirements, if applicable, Between This Frame and An:

Adjacent Like Frame: _____ End Guard: _____ Other Frames or Structure: _____

Equipment Locating Restrictions: None ____ Yes (Explain):

120 V ac Required: Yes: ___ No: ___ Circuit Breaker Size per feeder: _____

Number of feeders: ____ -48 V DC Required: Yes: ___ No: ___

Feeder 1 (Load A): List 1 drain: _____amps at _____V
List 2 drain: _____amps at 42.6V
List 2X drain _____amps at 42.6V

Feeder 2(Load B): List 1 drain: _____ amps at _____V
List 2 drain: _____ amps at 42.6V
List 2X drain _____amps at 42.6V

(List 2X is defined in ATT-TP-76450)

Minimum Operating Voltage _____and current _____from test in Section 7.3

DC-C___ or DC-I ___ configuration per section 9.8.3 of GR-1089-CORE,

EXTERNAL CABLING DATA

Equipment Cabling Plan Reference/Drawing
Number:_____

Do Special Cable Or Cabling Requirements Apply: No ___ Yes ___ (Describe):

(1) One form required per each frame of multi-frame system equipment.
(2) All dimensions to be expressed in FEET and INCHES.
(3) Width includes normal 1/16 inch space between adjacent frames

Copyright ©2014, AT&T . All Rights Reserved.

15.7 ESP-001

HEAT DISSIPATION DATA SHEET

Manufacturer: _____ Equipment: _____ Date: _____

List each active Component in the system:	POWER (Watts)[1]	# of Units (Count)		HEAT DISSIPATION *Per Unit* (Watts)		HEAT DISSIPATION *TOTAL* (Watts)	
Description/Part/Card Number	List 1 Drain	A: Max[3] Possible	B: AT&T[4] Design	C: Max[5] Possible	D: Nominal[6] AT&T Design	E: Maximum[7] (A) X (C) =	F: Nominal[8] (B) X (D) =
TOTAL WATTS FOR SYSTEM – REQUIRED FOR ALL SUBMISSIONS							

Airflow path design: – REQUIRED FOR ALL SUBMISSIONS

Are equipment air flow path(s) only front (intake) to rear (exhaust) (FX – RX) ? Yes _____ No _____

If No:

- **Specify Path(s) _____ _____ _____**
- **Attach a diagram depicting each of the path(s) & Specify direction of each of the flow(s)**

Notes:

1) At no time shall Maximum Heat Dissipation be larger than List 1 Power Drain

2) Where possible, heat dissipation measurements should be measured rather than calculated.
   - If the heat dissipation measurement is measured, follow the entry with a hyphen and the letter "M" for measured
   - If the heat dissipation measurement is calculated, follow the entry with a hyphen and the letter "C" for calculated
   - Examples: Measured = 4,000 – M or Calculated = 3,500 – C
   - The "M" or "C" shall be included for each heat dissipation measurement entry

3) **A: Maximum** possible is the total number of units that may be deployed in a system by engineering design

4) **B: AT&T design** is the total number of units that AT&T will typically deploys in a system.

Copyright ©2014, AT&T . All Rights Reserved.

- If the typical AT&T units deployed are unavailable, indicate the maximum number followed by a hyphen and the letter "U" for unknown. (e.g. 4-U)

5) **C: <u>Maximum</u>** possible is the maximum heat dissipation **PER UNIT** in Watts at full operating parameters (i.e., 100% full load/traffic)
   - This entry is **<u>NOT</u>** the worst case draw of the power supplies. Rather it is the full measured calculated heat dissipation from a fully loaded, in operation part or system.

6) **D: <u>Nominal</u>** is the heat dissipation **PER UNIT** in Watts while within normal operating parameters (i.e., 50-74% full load/traffic)
   - This entry is the Nominal (normal operating range) measured / calculated heat dissipation from a typical AT&T loaded, in operation part or system.

7) **E: <u>Maximum</u>** possible is the maximum heat dissipation **TOTAL** (# Units X Unit Heat) in Watts at full operating parameters (i.e., 100% traffic)
   - This entry is **<u>NOT</u>** the worst case draw of the power supplies. Rather it is the full measured / calculated heat dissipation from a fully loaded, in operation part or system.

8) **F: <u>Nominal</u>** is the heat dissipation **TOTAL** (# Units X Unit Heat) in Watts while within normal operating parameters (i.e., 50-74% full load/traffic)
   - This entry is the Nominal (normal operating range) measured / calculated heat from a typical AT&T loaded, in operation part or system.

Copyright ©2014, AT&T . All Rights Reserved.

15.8. *ESP-002 Form*

ENGINEERING & SPACE PLANNING EQUIPMENT DATA

Shelf Level Equipment Units (1)

Manufacturer:_____ Product Name:_____ Date:_____

Unit Functional Description: _____

Product ID: _____ Nomenclature (Acronym): _____

Names of Associated Units per Function: _____

EQUIPMENT DATA

Overall Dimensions (inches): Height:____ Depth (2):_____ Width: _____
Unit Weight: Unit Installed Weight (fully equipped) _____ lbs
Minimum Aisle Spacing Requirements (feet & inches): Front: _____ Rear: _____
Requires 120 V ac: Yes ___ No ___Circuit Breaker Size per feeder: ____
Number of feeders: ___ -48 V DC: Yes: ___ No: ___

Feeder 1 (Load A): List 1 drain: _____amps at _____V
List 2 drain: _____amps at 42.6V
List 2X drain _____amps at 42.6V

Feeder 2(Load B): List 1 drain: _____ amps at _____V
List 2 drain: _____ amps at 42.6V
List 2X drain _____amps at 42.6V
(List 2X is defined in ATT-TP-76450)

Minimum Operating Voltage _____and current _____from test in Section 7.3

DC-C___ or DC-I ___ configuration per section 9.8.3 of GR-1089-CORE

Heat Baffles Required: Yes ___ No ___ If Yes, Supplied With Unit: Yes ___ No ___

UNIT TO FRAMEWORK MOUNTING DATA

Supported Mounting Flange Hole Patterns: 1 3/4 x 19" ___ 1 3/4 x 23" ___ 2 x 23" ___

Unit Mounts to Front of Framework Uprights: Yes ___ No ___
List Unit Locating Restrictions/Considerations if Any: _____

_____

Distance Unit Extends From Framework Mounting Surface: _____ (in.)

EXTERNAL CABLING DATA

Unit Cabling Plan Reference/Drawing Number: _____

Unit Is Cabled From The Rear: Yes ___ No ___ Front and Rear: _____

Required Alarm Leads and Designations: _____

Do Special Cable Or Cabling Requirements Apply: No ___ Yes ___ (Describe):
(1) One form required per each unit of a multi-unit product/system.
(2) Overall depth includes cable and its supporting apparatus.

Copyright ©2014, AT&T . All Rights Reserved.

15.8 ESP-002

HEAT DISSIPATION DATA SHEET

Manufacturer: _____ Equipment: _____ Date: _____

List each active Component in the system:	POWER (Watts)[1]	# of Units (Count)		HEAT DISSIPATION *Per Unit* (Watts)		HEAT DISSIPATION *TOTAL* (Watts)	
Description/Part/Card Number	List 1 Drain	A: Max[3] Possible	B: AT&T[4] Design	C: Max[5] Possible	D: Nominal[6] AT&T Design	E: Maximum[7] (A) X (C) =	F: Nominal[8] (B) X (D) =

TOTAL WATTS FOR SYSTEM – REQUIRED FOR ALL SUBMISSIONS

Airflow path design: – REQUIRED FOR ALL SUBMISSIONS

Are equipment air flow path(s) only front (intake) to rear (exhaust) (FX – RX) ? Yes _____ No _____

If No:

- **Specify Path(s) _____ _____ _____**
- **Attach a diagram depicting each of the path(s) & Specify direction of each of the flow(s)**

Notes:

1) At no time shall Maximum Heat Dissipation be larger than List 1 Power Drain
2) Where possible, heat dissipation measurements should be measured rather than calculated.
   - If the heat dissipation measurement is measured, follow the entry with a hyphen and the letter "M" for measured
   - If the heat dissipation measurement is calculated, follow the entry with a hyphen and the letter "C" for calculated
   - Examples: Measured = 4,000 – M or Calculated = 3,500 – C
   - The "M" or "C" shall be included for each heat dissipation measurement entry
3) **A: Maximum** possible is the total number of units that may be deployed in a system by engineering design
4) **B: AT&T design** is the total number of units that AT&T will typically deploys in a system.
   - If the typical AT&T units deployed are unavailable, indicate the maximum number followed by a hyphen and the letter "U" for unknown. (e.g. 4-U)

Copyright ©2014, AT&T . All Rights Reserved.

5) **C: <u>Maximum</u>** possible is the maximum heat dissipation **PER UNIT** in Watts at full operating parameters (i.e., 100% full load/traffic)
   - This entry is **<u>NOT</u>** the worst case draw of the power supplies. Rather it is the full measured calculated heat dissipation from a fully loaded, in operation part or system.
6) **D: <u>Nominal</u>** is the heat dissipation **PER UNIT** in Watts while within normal operating parameters (i.e., 50-74% full load/traffic)
   - This entry is the Nominal (normal operating range) measured / calculated heat dissipation from a typical AT&T loaded, in operation part or system.
7) **E: <u>Maximum</u>** possible is the maximum heat dissipation **TOTAL** (# Units X Unit Heat) in Watts at full operating parameters (i.e., 100% traffic)
   - This entry is **<u>NOT</u>** the worst case draw of the power supplies. Rather it is the full measured / calculated heat dissipation from a fully loaded, in operation part or system.
8) **F: <u>Nominal</u>** is the heat dissipation **TOTAL** (# Units X Unit Heat) in Watts while within normal operating parameters (i.e., 50-74% full load/traffic)
   - This entry is the Nominal (normal operating range) measured / calculated heat from a typical AT&T loaded, in operation part or system.

Copyright ©2014, AT&T . All Rights Reserved.

15.9. *ESR-001 (CG Level 1)*

Carrier Grade Level 1

ATT-TP-76200 Minimum Safety Requirements for Carrier Grade Equipment Deployed Indoors

Manufacturer:_____ **Product Name:**_____ **Date:**_____

Carrier Grade (CG) DEPLOYMENT			
2. GR-1089 Electromagnetic Compatibility & Electrical Safety Requirements: * Note The requirement numbers below are the GR1089 Absolute Requirement Numbers. See GR1089, Paragraph 1.4.1			
R #	**Description**	**R #**	**Description**
N/A	Equipment Type	56	Class A3 Voltage
8	Radiated Emissions	57	Class A3 segregtd
9	Radiated Emissions Obj.	58	Class A3 Labeled
10	Radiated Emissions	59	Class AB restricted
12	Conducted Emissions	60	Class AB inacces.
13	Conducted Common Mode Emiss.into Low-voltage	61	Rubber gloves
128	Conducted Common Mode Emiss.from EUT into signal leads	62	Eqpt pwrd by gen...
22	Listing AC Power	63	Class B de-enrgzd
23	Listing Inverters	64	Interrupted/tripped v
24	Listng Cust Prem Equip	65	Voltage interrupted
25	EUT damage	66	Int./Tripped include
29	EUT Safety Hazard	67	Peak Voltage
33	EUT Safety Hazard	68	Sources Com. Wire
36	EUT Safety Hazard	69	Current - 100cm
40	EUT Safety Hazard	70	Current - 1cm
41	EUT not meet require	71	Current measured
54	Class A1 Voltage	115	Continuous Source Volt
55	Class A2 Voltage		
Other ATT-TP-76200 Requirements:		**9. Shock and Vibration**	
2.3C	RF Transmission Devices	9.6	Standard Frames
2.10	Surge Protection Devices		
3 Acoustic Noise		**10. Fire Resistance**	
3	ATT-TP-76200 Section 3.A	10.4	Material Components.
5. Grounding *		10.5	Panels/Barriers
5.0	GR-1089, Section 9	10.5A	Fire Spread
6. Thermal		Completed FRM-001 Form	
6.4 Heat Dissipation			
6.4.D.1	Heat Dissip. Data[1]		
6.6.A.1	Fan forced		
6.6.A.1	Flow front to back		
6.6.A.1	Face Temperature		

*** NRTL Listing and FCC Part 15 may be considered in lieu of these requirements**

1. Use appropriate ESP form to report this information.
2. The Acoustic Noise requirements for Carrier Grade Level 3 may be used in lieu of the requirements in Section 3 above if desired.

Copyright ©2014, AT&T . All Rights Reserved.

15.10. *ESR-001-(OSP/CELL-SITE Level 1)*

Outside Plant/Cell Site Level 1

ATT-TP-76200 Minimum Safety Requirements:
Carrier Grade Equipment located in Outside Plant Cabinets and Enclosures

Manufacturer:_____ Product Name:_____ Date:_____

Outside Plant/Cell Site Electronics											
2. GR-1089 Electromagnetic Compatibility & Electrical Safety Requirements * : Note The requirement numbers below are the GR1089 Absolute Requirement Numbers. See GR1089, Paragraph 1.4.1											
R #	**Description**					**R #**	**Description**				
N/A	Equipment Type					54	Class A1 Voltage				
8	Radiated Emissions					55	Class A2 Voltage				
10	Radiated Emissions					56	Class A3 Voltage				
11	Radiated Emissions					57	Class A3 segregtd				
12	Conducted Emissions					58	Class A3 Labeled				
13	Conducted Common Mode Emiss.into Low-voltage.					59	Class AB restricted				
128	Conducted Common Common Mode Emiss.from EUT into signal leads					60	Class AB inacces.				
22	Listing AC Power					61	Rubber gloves ...				
22	Listing AC Power					62	Eqpt pwrd by gen.				
23	Listing Inverters					63	Class B de-enrgzd				
24	Listng Cust Prem Equip					64	Interrupted/tripped v.				
25	EUT damage					65	Voltage interrupted				
29	EUT Safety Hazard					66	Int./Tripped include				
33	EUT Safety Hazard					67	Peak Voltage				
36	EUT Safety Hazard					68	Sources Com. Wire				
40	EUT Safety Hazard					69	Current - 100cm				
41	EUT not meet require.					70	Current - 1cm				
						71	Current measured				
						115	Continuous Source Volt				
Other Applicable ATT-TP-76200 Level 1 Requirements:											
2.3 C	RF Transmission Devices										
2.10	Surge Protection Devices										
5. Grounding *						**10. Fire Resistance ***					
5.0	GR-1089, Section 9					10.6C	GR-3108, Section 6.4.				
6. Thermal						Completed FRM-001 Form					
6.4. Heat Dissipation											
6.4.D.1	OSP Heat Dissip. (GR-3108)										
6.6.A.2	Forced Air Cooled										
6.6.A.2	Flow F-R or B-T										
6.6.A.2	Face Temperature										
Note: Closure or Cabinet may require an ATT-TP76205 Evaluation. See Section 14											

* Note: Compliance to NRTL Listing and FCC Part 15 may be accepted in lieu of these requirements.

- **Communication Equipment Placed at Customer Prem Requires LISTING**

Copyright ©2014, AT&T . All Rights Reserved.

15.11. *ESR-003-(CG Level 3)*

Carrier Grade Equipment Level 3

ATT-TP-76200 Safety and Operability Requirements Carrier Grade Equipment Deployed Indoors

Manufacturer:_____ **Product Name:**_____ **Date:**_____

Item	Reference					Item	Reference				
2 Electromagnetic Compatibility/Electrical Safety						**7 DC Power**					
2.2	Equipment Type					7.2	Under voltage				
2.3	Rad. Emission					7.3	Min. Operating V*				
2.3C	RF Transmitting Dvcs					7.4	Current Drain*				
2.4	Cond. Emission					7.5	Over voltage				
2.5	Immunity					7.6	Over voltage transient				
2.6	Lightning/AC Pwr.					7.7	Protective Device trans				
2.7	Steady State Pwr.					7.8	Electrical Noise				
2.8	Electrical Safety										
2.9	DC Potential										
2.10	Surge Protection Devices					**8 Airborne Contaminants**					
						8.1	Indoor, GR-63				
						8.3	Fan Filters				
						9 Shock and Vibration					
						9.1	Transport				
3 Acoustic Noise						9.2	Vibration				
3.A1	Meet GR-63					9.3	Earthquake				
Note: Must comply with GR 63 Table 4-8 for equipment located in an attended room, i.e. 78 LWAd (dB)						9.4	Positive Latching				
4 Electrostatic Discharge & Fast Transient						9.5	Hard Drive Backup				
4.1	GR-1089, Sec 2.1.2					9.6	Standard Frames				
4.2	GR-1089, Sec 2.1.2.4					9.7	Self Support Frame				
4.3	GR-1089, Sec 2.2					9.8A	Office Vibration, Indoor				
5 Grounding						9.9	Floor Loading				
5.1	GR-1089, Section 9					**10 Fire Resistance**					
						10.4	Material Components				
6 Thermal						10.5	Protective Barriers				
6.1 Temperature and Humidity						10.5a	Fire Spread				
6.1A	Indoor, GR-63					Completed FRM-001 Form					
6.2 Altitude						**11 Spatial**					
6.2A	Indoor GR-63					11.4	Equipment and Framework				
						11.5	Equipment Loading				
						11.6	Equipment Units				
6.4. Heat Dissipation						**12 Physical Design and Manufacturing**					
6.4.D.1	Heat Dissip. Data*					12.1	GR-78				
6.6.B.1	Fan forced					12.2	Pb-free Solder: SJR				
6.6.B.1	Flow front to back					13.6	Energy Efficiency Report				
6.5.A.1	Face Temperature										

*** Use appropriate ESP form to report this information.**

Copyright ©2014, AT&T . All Rights Reserved.

15.12. *ESR-003-(NCG Level 3 and Level 1)*

Non-Carrier Grade Equipment L3 (top section) L1 (lower section)

ATT-TP-76200 Requirements for Non-Carrier Grade Equipment not deployed in Carrier Communications Spaces

Manufacturer:_____ Product Name:_____ Date:_____

Non Carrier Grade (NCG) Level Three											
Item	**Reference**					**Item**	**Reference**				
2 Electromagnetic Compatibility/Electrical Safety						**7 DC Power (if applicable)**					
2.2	Equipment Type					7.2	Under voltage				
2.3	Rad. Emission					7.3	Min. Operating V*				
2.3.C	RF Transmission Dvcs.					7.4	Current Drain*				
2.4	Cond. Emission					7.5	Over voltage				
2.5	Immunity					7.6	Over voltage transient				
2.6	Lightning/AC Pwr.					7.7	Protective Device trans				
2.7	Steady State Pwr.					7.8	Electrical Noise				
2.8	Electrical Safety					**8 Airborne Contaminants**					
2.8	NRTL Listing (required)					8.1	Indoor, GR-63				
2.9	DC Potential					8.3	Fan Filters				
2.10	**Surge Protection Devices**					**9 Shock and Vibration**					
3 Acoustic Noise						9.1	Transport				
3.A.I	Meet GR-63					9.2	Vibration				
						9.3	Earthquake				
4 Electrostatic Discharge & Fast Transient						9.4	Positive Latching				
4.1	GR-1089, Sec 2.1.2					9.5	Hard Drive Backup				
4.2	GR-1089, Sec 2.1.2.4					9.6	Standard Frames				
4.3	GR-1089, Sec 2.2					9.7	Self Support Frame				
						9.8A	Office Vibration, Indoor				
						9.8B	Office Vibration, OSP/CELL-SITE				
5 Grounding						9.9	Floor Loading				
5.1	GR-1089, Section 9										
6 Thermal						**10 Fire Resistance**					
6.1 Temperature and Humidity						10.4	Materials & Comp.				
6.1A	Indoor, GR-63										
6.2 Altitude						**12 Physical Design and Manufacturing**					
6.2A	Indoor GR-63					12.1	GR-78				
6.4. Heat Dissipation						12.2	Pb-free Solder: SJR				
6.6.A.1	Heat Dissip. Data[2]										
6.6.B.2	Fan forced										
6.6.B.2	Flow front to back										
6.5.A.1	Face Temperature										
Non-Carrier Grade (NCG) Level One											
	Description						**Description**				
NRTL listing						FCC Part 15[2]					
*2.3.C RF Trans if applicable											

- **Non Carrier Grade Level 1 Requires NRTL Listing, FCC part 15, Data Sheet and *RFTX form if RF Device.**

Copyright ©2014, AT&T . All Rights Reserved.

15.13. *ESR-003-OSP/CELL-SITE (Level 3)*

Outside Plant/Cell Site Level 3
ATT-TP-76200 Requirements for Electronic Equipment Deployed in Outside Plant

Manufacturer:_____ **Product Name:**_____ **Date:**_____

CLASS 2 & 3 & 4[1] OSP/CELL-SITE ELECTRICAL COMPONENT REQUIREMENTS[2]

Item	Reference					Item	Reference				
2 Electromagnetic Compatibility/Electrical Safety						**7 DC Power**					
2.2	Equipment Type					7.2	Under voltage				
2.3	Rad. Emission					7.3	Min. Operating V*				
2.3 C	RF Transmissions Dvcs					7.4	Current Drain				
2.4	Cond. Emission					7.5	Over voltage *				
2.5	Immunity					7.6	Over voltage transient				
2.6	Lightning/AC Pwr.					7.7	Protective Device trans				
2.7	Steady State Pwr.					7.8	Electrical Noise				
2.8	Electrical Safety										
2.9	DC Potential										
2.10	Surge Protection Devices										
3 Acoustic Noise											
3B	GR-3108 Section 6.5					**8 Airborne Contaminants**					
4 Electrostatic Discharge & Fast Transient						8.2 A	GR-63 R4-100, Section 4.5.1.1				
4.1	GR-1089 Section 2					8.2 B	GR-3108, Section 6.3				
5 Grounding						8.3	Fan filters				
5.1	GR-1089, Section 9					**9 Shock and Vibration**					
6 Thermal						9.1 B	Transport & Handling				
6.2Temperature and Humidity (pick applicable rqmt)						9.2	Vibration				
6.2B.2	GR-3108, Section 44					9.3	Earthquake				
						9.4	Positive Latching				
6.3 Altitude						9.5	Hard Drive Backup				
6.3.B.2	GR-3108- Section 4.7					9.8B	Field Vibration, OSP/CELL-SITE				
6.4. Heat Dissipation						**10 Fire Resistance**					
6.4.D.1	Heat Dissip. Data[3]					10.5C	GR-3108, Section 6.4.				
6.6.B.2	Fan forced					12 Physical Design and Manufacturing					
6.6.B.2	Flow front to back					12.1	GR-78				
6.5.A.2	Face Temperature					12.2	Pb-free Solder:SJR				
						13.6	Energy Efficiency Report				
OSP/CELL-SITE ENCLOSURES See ATT-TP-76200 Section 14											

1. Equipment must conform to requirements applicable to Class of Environment intended for deployment
2. Equipment intended for deployment in both CO and OSP/CELL-SITE locations must be compliant to both Level 3 CO & OSP/CELL-SITE requirements
3. Use appropriate ESP form to report this information.

NOTE: The configuration of equipment deployed in OSP/CELL-SITE cabinets must be approved by OSP/CELL-SITE staff prior to approval for use. See paragraph **14.1** of this document.

4. Communication Equipment Placed at Customer Prem Requires LISTING

Copyright ©2014, AT&T . All Rights Reserved.

15.14. *ESR_ANC*

Ancillary Equipment Level 1[1] and Level 3 ATT-TP-76200 Requirements

Manufacturer:_____ **Product Name:**_____ **Date:**_____

Item	Reference					Item	Reference				
2. Electromagnetic Compatibility/Electrical Safety						**7. DC Power**					
2.2	Equipment Type					7.2	Under voltage				
2.3	Rad. Emission					7.3	Min. Operating V*				
2.3.C	RF Transmission Dvcs					7.4	Current Drain*				
2.4	Cond. Emission.					7.5	Over voltage				
2.5	Immunity					7.6	Over voltage transient				
2.6	Lightning/AC Pwr					7.7	Protective Device trans				
2.6	Fault Testing					7.8	Noise Immunity				
2.7	Steady State Pwr					**8. Airborne Contaminants**					
2.8	Electrical Safety.					8.1	Indoor, GR-63				
						8.2	OSP/CELL-SITE , GR-3108				
						9. Shock and Vibration					
						9.2	Vibration				
4. Electrostatic Discharge						9.3	Earthquake				
4.1	GR-1089, Sec 2.1.2					9.8	Office Vibration				
4.2	GR-1089, Sec 2.1.2.4										
4.3	GR-1089, Sec 2.2					**10. Fire Resistance**					
						10.4	Materials & Comp.				
5. Grounding						10.5	Protective Barriers				
5.1	DC Short Circuit					10.5 A	Fire Spread				
5.1	AC Short Circuit					Completed FRM-001 Form					
6. Thermal											
6.2 Temperature and Humidity						12 Physical Design and Manufacturing					
6.2	Indoor, GR-63					12.1	GR-78				
6.2	OSP/CELL-SITE , GR-3108					12.2	Pb-free Solder:SJR				
6.4 Heat Dissipation											
6.4.D.1	Heat Dissip. Data[1]										
6.6	Fan forced										
6.6	Flow front to back										
6.5.A	Face Temperature										

NOTE:

Some tests may not be required if circuit packs can be demonstrated to be similar to original circuit packs in construction. See Appendix B.

1. Use appropriate ESP form to report heat dissipation

Copyright ©2014, AT&T . All Rights Reserved.

15.15. *FRM-001 Form*

DECLARATION OF FIRE RESISTANCE OF MATERIALS

Manufacturer:_____ Equipment Name:_____ Date:_____

This statement of compliance applies to the following product(s) which are being considered for purchase:

The below individual having reasonable control over the fire resistance characteristics of materials and components used in the construction and manufacture of the above product(s) assures that:

1. ___ All materials and components, except those listed below, meet the fire resistance requirements contained in the current issue of ANSI T1.307 *Fire Resistance Criteria - Part 1: Ignitability Requirements for Equipment Assemblies, and Fire Spread Requirements for Interconnection Wire and Cable Distribution Assemblies*.

2. ___ Products having an exposed surface area < ft.^{2} (0.09 m^2) shall be formed from materials having a fire resistance characteristic equivalent to or better than UL-94 V-0 at its minimum rated thickness (T1.307 section 4.4.1 a).

3. ___ Products having an exposed surface area >1 ft.^{2} (0.09 m^2) to 10 ft.^{2} (0.93 m^2) shall be formed from materials having a fire resistance characteristic equivalent to or better than UL-94 5VA at its minimum rated thickness (T1.307 section 4.4.1 b).

4. ___ Products having an exposed surface area >10 ft.^{2} (0.93 m^2) shall be formed from materials having a fire resistance characteristic equivalent to or better than UL-94 5VA at its minimum rated thickness, and shall have a flame spread rating of <200. Flame spread ratings may be determined by radiant panel test methods that are equivalent to those contained in UL standard 94, *Tests for flammability of plastic materials for parts in devices and appliances* or UL standard 723 *Test For Surface Burning Characteristics Of Building Materials* (T1.307section 4.4.1 c).

5. ___ Items 2, 3 and 4 are not applicable to the product(s).
   The below non-metallic components (other than LEDs, small cable ties and terminal lug insulators) do not or may not comply with Items 1 through 4 above. The combined weight of the listed components is _____ grams.

_____ _____
Signature Printed name

_____
Title

Copyright ©2014, AT&T . All Rights Reserved.

15.16. *PbF Form*

Pb-Free Solder Declaration

Supplier: Equipment Name:

Equipment ID: Nomenclature (Acronym):

Does the product contain PWBs or Components that are assembled with Pb-free solder?

YES ☐ **NO** ☐

If **"Yes" is checked** Please provide all test results along with the Checklist as per ATTIS standards ATTIS 0600019 and ATTIS 0600020. Please refer back to Section 12 of ATT-TP-76200 for more information.
Does the product contain a mixture of Pb and Pb-free soldered components?

YES ☐ **NO** ☐

If "**Yes" is checked** provide a complete list of all components that are Pb-free.
Please provide all test results along with the Checklist as per ATTIS standards ATTIS 0600019 and ATTIS 0600020. Please refer back to Section 12 of TP76200 for more information.

(Company name) has caused this Letter of Declaration to be executed by its duly authorized representative as of the date written below.

By:
Title:
Date:

NOTE: This affidavit must be signed in front of a notary and notarized _____.

Copyright ©2014, AT&T . All Rights Reserved.

15.17. *RFTX Form*

Radio Frequency Transmitting Device Characteristics

Manufacturer:_____ **Equipment Name:**_____

Model or Part Number:_____ **Options**_____

Date:_____

Ref #	Characteristic	Values
1	Transmitted frequencies	
2	Maximum RF power output from each transmitter (hardware Limitation) in the maximum power configuration	
3	Maximum radiator/antenna gain for all formats used (dBi)	
4	Maximum Effective Isotropic Radiated Power (EIRP in dBm) in any direction/polarization for the hardware combinations proposed in the maximum transmitting power configuration. (state Average or Peak power)	
5	Antenna working orientation and radiation pattern (attach pattern chart/graph or equivalent information, “omni-directional,” etc.) for all indoor radiators	
6	Carrier modulation patterns or maximum transmission cycle frequency for the transmitting devices	
7	Maximum number of transmitting devices per system unit or shelf (for systems with multiple co-located RF transmitting devices, e.g. multi-radio or multi-card shelves)	
8	For discrete component systems, specify maximum RF leakage emissions level for interconnecting interior waveguide or coaxial cable.	

See Section 1.9 and 2.3.C for requirements criteria and Paragraph 15.6 for description. Complete one form for each self-contained device or unique transmitter and radiator combination. If several transmitting devices are involved, please provide tabulated information as an attachment. Reproduce Form RFTX as needed. Provide attachments from the manufacturer or an accredited testing laboratory (reference Section 1.12) documenting the RF emissions levels stated. For item 8, any documented measurements are acceptable if specified documents are not available.

Copyright ©2014, AT&T . All Rights Reserved.

16. APPENDIX A

ATT-TP-76200 Equipment Evaluation Process

16.1. *Purpose*

The purpose of this appendix is to assist product suppliers with preparing and furnishing equipment documentation to the company representative for product evaluation purposes.

16.2. *Evaluation Types, Evaluation Levels and Equipment Locations*

Types and Deployment Locations
Refer to Section 1.6 through 1.10.

16.3. *Product Evaluation Documentation*

Documentation verifying that the equipment has been tested and conforms to applicable ATT-TP-76200 requirements must be submitted to the company representative. There are two acceptable processes for supplying documentation verifying conformance.

16.4. *Test Report Documentation Package*

Product information shall be assimilated in an organized fashion and provided to the company representative. A *cover memo* identifying included documentation should be included to facilitate the evaluation process. If available, informative product awareness brochures should also be provided.

Test Report Details

Relative to product test reports, AT&T Services accepts test reports from any testing facility adequately equipped and capable of performing the required tests in a professional manner under the requirements. At a minimum, test reports shall contain the following information:

- Test report number
- Description of Equipment Under Test (EUT), including specific test configuration
- Location and date of test

Description of test equipment

- Calibration dates of test equipment
- Protocol of test with stated pass/fail criteria

Copyright ©2014, AT&T . All Rights Reserved.

- Test result data
- Assessment of whether equipment passed or failed the test
- Detailed notes on any anomalies during test procedure

Detailed notes on any modifications made to the equipment in order to pass the test and detailed plans to incorporate the modifications into the final product.

Note: If the documentation is being submitted electronically or via CD disk, the file name or file folder shall clearly identify the file's contents (e.g. GR-63 test data). Reference the ATT-TP-76200/ATT-TP-76450 Evaluation Log #.

16.5. *ATT-TP-76200/ATT-TP76450 Documentation Package*

Each documentation package shall include a

Test reports component List: This is an Excel spreadsheet of all components within the Lab Test report provided. Used for inventory of Equipment.

Include Manufacture, product, and Evaluation Log number and the report. Then the components listed with Part and any related reference numbers

NOTE: The ESR form is no longer required as part of the ATT-TP-76200 documentation packages but is still included in the ATT-TP-76200 as an Equipment Supplier Requirements checklist for the Level of conformance being evaluated.

1. **Carrier Grade- Documentation package requires**

- **ATT-TP-76200 Carrier Grade-Level 3 :**

- Detailed test results supporting the ESR-003 CG, ESP/ATIS_tables*, FRM, Pbf* Forms Energy Efficany report and the ATT-TP76450 checklist

  (If response to the Pbf form states Lead Free Solder see ATT-TP76200 Section 12 for additonal required testing and documentation)
  (RF- Transmitting Devices require RFTX form)
  (*ATIS Tables ATT-TP-76200 Section 6.)

- **ATT-TP-76200 Carrier Grade-Level 1**:

- Detailed test results supporting the ESR-001 CG, ESP/ ATIS_tables*, FRM Forms and the ATT-TP-76450 Checklist.
  (RF- Transmitting Devices require RFTX form
  (*ATIS Tables(ATT-TP-76200 Section 6.)

Copyright ©2014, AT&T . All Rights Reserved.

- **ATT-TP-76200 Ancillary :**
- Detailed test results supporting the ESR-ANC, ESP, FRM, Pbf Forms.
  (If response to the Pbf form states Lead Free Soder see ATT-TP76200 Section 12 for additonal required documentation)
  ATIS Tables (ATT-TP-76200 Section 6 .) or Note original evaluation Log or No change in Air flow or thermals.

  Outside of the United States of America (MoW):
  For Countries other than the U.S.A. These locations will require an Attestation to the applicable Local Safety Codes, RF Emission, Environmental (RoHS/WEE) requirements by Country. Outside the United States Attestation. Required. (16.12)

-

2. **Non Carrier Grade package requires**:

   - **ATT-TP-76200 Non-Carrier Grade-Level 3**
     Detailed test results supporting the ESR-000-NCG, ESP/ATIS Tables, FRM, PbF Forms.
     ATIS Tables (ATT-TP-76200 Section 6 .) (RF- Transmitting Devices require RFTX form)

   - **ATT-TP-76200 Non-Carrier Grade-Level 1**
     NRTL Listing and FCC Part 15 Detailed verification reports test results and Product Data Sheet. (RF- Transmitting Devices require RFTX form)

     Outside of the United States of America (MoW):
     For Countries other than the U.S.A. These locations will require an Attestation to the applicable Local Safety Codes, RF Emission, Environmental (RoHS/WEE) requirements by Country. Outside the United States Attestation. Required. (16.12)

3. **ATT-TP-76200 Out Side Plant / Cell Site Level 1:**
   Detailed test results supporting the ESR-001 OSP/CELL-SITE, ESP/, FRM. PbF and ATT-TP-76450 Checklist

4. **ATT-TP-76200 OSP/CELL-SITE-Level 3 :**Detailed test results supporting the ESR-003 OSP/CELL-SITE, ESP/ATIS Tables, FRM, and PbF Forms. ATT-TP-76450 Checklist.
   ATIS Tables (ATT-TP-76200 Section 6 .)

5. **OSP/CELL-SITE Closures:** ATT-TP-76205 See Section 14

   NOTE: Equipment will not be evaluated for use without receipt of correct ATT-TP-76200/ATT-TP-76450 Documentation or Fast Track Package..

Copyright ©2014, AT&T . All Rights Reserved.

16.6. *AT&T Services Documentation Package Evaluation Process*

The AT&T Services Common Systems Equipment Evaluation group will review the equipment Documentation Package. If the equipment cannot be evaluated as compliant to all applicable requirements, an Initial Letter will be sent to the company representative specifying the areas that are not evaluated in conformance and what further action is required of the equipment supplier.

Upon receipt of the Initial Letter, the equipment supplier may forward supplemental data to or contact the company representative, the AT&T Services Equipment Evaluation Group Coordinator or a specific SME regarding non-compliance resolution. Contact information for the Group Coordinator and SMEs is contained in the Initial Letter. Documentation, electronic, forwarded to AT&T Services containing supplemental data in response to an Initial Letter should identify the contents of documentation and reference the Evaluation **Log number** assigned to the product, the SME who requested the data and the non-compliance requirement the data is addressing.

The SME(s) who requested the documentation will evaluate supplemental data forwarded to AT&T Services by the product supplier. If the supplemental data is sufficient to allow all open areas to be evaluated as in conformance to applicable requirements, a Notification of Conformance to ATT-TP76200 Report will be sent to the company representative notifying them that the equipment conforms to requirements. If there are still open items after supplemental data has been reviewed an Evaluation Status letter will be sent to the company representative giving the status of the product and what further action the product supplier needs to take.

16.7. AT&T Services Product Evaluation Fast Track Process

AT&T Services has established a fast track process it will use for certain business opportunities to streamline equipment evaluations and shorten time-to-market intervals. The process consists of AT&T Services accepting ATT-TP-76200 compliance Letters of Attestation and minimal product information from equipment suppliers in lieu of the Test Report Documentation Package described above.

A. ATT-TP-76200 Fast Track General guidelines:

1) The process is an optionally agreed upon business arrangement between AT&T Services and an equipment supplier.
2) A supplier must have successfully participated in the Test Report Documentation Package process at least once to be eligible for the fast track process.
3) AT&T Services reserves the right to review any and all test documentation cited in the Letter of Attestation during the time the equipment is an integral component of AT&T's network.
4) Test documentation cited in the Letter of Attestation must be made available to AT&T Services within 20 business days upon receipt of a written request.

Copyright ©2014, AT&T . All Rights Reserved.

5) AT&T Services may take any or all of the following actions for products approved for use via a Letter of Attestation that are subsequently found not to conform to applicable ATT-TP-76200 requirements:

   - Suspend further purchase of the product.
   - Require previously purchased products be brought into compliance.
   - Suspend the supplier's further use of the Fast Track process.
   - Hold the supplier liable for any damages directly resulting from the product's failure to conform to applicable requirements.

6) The equipment must have been tested and found in conformance to **ALL** applicable requirements. **The Fast Track Process will not be accepted if any requirement is not met or is conditionally met.**

7) The Fast Track process may NOT be used:

   - If the equipment contains integrated protectors.
   - For OSP/CELL-SITE enclosures. (ATT-TP-76205 requirements and process applicable)
   - For equipment with radio frequency (RF) transmitting devices

B. AT&T Services Product Evaluation Fast Track Process Procedure for Product Suppliers

1) Verify with the company representative that the Fast Track process is appropriate for the product/project.
2) Complete all applicable tests required by ATT-TP-76200.
3) Review and verify the product's conformance to **ALL** applicable requirements.
4) Complete and submit the Letter of Attestation that is applicable for the Type of Evaluation (i.e., Level 1, Level 3 or Ancillary). A template for the letter is contained in 16.8. All of the information requested in the applicable template must be completed. The Letter of Attestation must be signed at director level or above and notarized.
5) Complete and submit the Test report components list.
6) Complete and submit either form ESP-001 or ESP-002, whichever is applicable for the product and ATIS Air Flow reports. (ATT-TP76200 Section 6).
7) Complete and submit form Attachment 1, Fast Track Report Form
8) Complete ATT-TP-76450 Checklist and or PbF Form if Not Checked on the Letter of Attestation.
9) RF- Transmitting Devices require RFTX form and conformance to 2.3.C

Copyright ©2014, AT&T . All Rights Reserved.

16.8. *AT&T Letter of Attestation::*

AT&T SERVICES FAST TRACK REPORT

If the request use of the Fast Track program, this form must be submitted with a complete description of the equipment's design and function. Manufacturer's documents such as brochures may be attached for reference when applicable.

Equipment vendor name:

Equipment model:

Does equipment have optical components? Yes ☐ No ☐

Equipment Port Types (Port Type shall be determined using GR-1089, Appendix B).

General technology description (e.g. DSLAM, DLC, etc.) including drawings, pictures, etc.:

Detailed description of functionality:

Copyright ©2014, AT&T . All Rights Reserved.

AT&T SERVICES LETTER OF ATTESTATION

Equipment Compliance to AT&T Services Technical Publication ATT-TP-76200 Requirements

(Company name) hereby asserts, to the best of its knowledge, and pursuant to the information contained in the test reports identified herein, that the equipment listed below has been tested and found compliant to ALL applicable AT&T Technical Publication ATT-TP-76200 requirements as indicated below.

Equipment vendor name:

Equipment model:

Name of test Facility/internal organization performing tests:

Date of test report(s):

Test report number(s):

Mark the ATT-TP-76200 Requirements to which the equipment conforms.

Evaluation Type		Evaluation Requirement Level		Equipment Type		Equipment Deployment Locations	
New	☐	Level One (ESR-001-xxx)	☐	Carrier Grade	☐	Carrier Communication Space (*Example: CO, Mtso, NTC, SNRC)	☐
Ancillary	☐	Level Three (ESR-003-XXX)	☐	Non-Carrier Grade	☐	Partitioned Network Space**	☐
PCN (Product Change Notice)	☐			Network Administrative Support	☐	AT&T Test Laboratory	☐
				Outside Plant (OSP)	☐	OSP/Cell site GR-3108 Class 1 CEV/HUT	☐
				Portable Test Set	☐	Outside Plant/Cell Site GR-3108 Class 2 (-40C to +65C)	☐
				RF- Transmitting Device*	☐	Outside Plant/Cell Site GR-3108 Class 3 (-40C to +70C)	☐
				Network Customer Prem	☐	Outside Plant/Cell Site GR-3108 Class 4 (Unprotected)	☐

* For RF Transmitting Devices, requires RFTX Form.

**Example:SHO/VHO, Affiliate, and Customer Premise) Space separated by one-hour fire rated barriers from Carrier

Additional Information:

Is the equipment listed for its use by a Nationally Recognized Testing Laboratory (NRTL) Yes ☐ No☐

Has this equipment been modified in any manner to meet requirements? Yes ☐ No☐
If yes, disclose any modification used in testing to the equipment which are necessary to meet ATT -TP-76200 requirements (use page 2 if necessary)

Is shielded cable required to meet GR-1089 4.6? If so, explain. Yes ☐ No ☐
(use page 2 if necessary)

Is any part of the equipment manufactured with lead-free solder? Yes ☐ No ☐

If the equipment uses lead-free solder, does it meet requirements in Section 12.2? . ... Yes ☐ No ☐

Is the equipment a Radio Frequency Transmitting Device? .... Yes ☐ No ☐

Copyright ©2014, AT&T . All Rights Reserved.

Page 3 of AT&T Services Letter of Attestation

(Company name) agrees that statements made in this letter may be audited by AT&T Services via a review of compliance confirmation data (the reports listed above), and that this data will be made available to AT&T Services within 20 business days of request. If the above equipment is determined to not meet AT&T Services requirements as attested to, __ (company name) __ acknowledges and agrees that, at its expense, it will remedy any such non-compliance in accordance with the terms of the contract under which the equipment was evaluated/purchased and/or licensed. .

(Company name) has caused this Letter of Attestation to be executed by its duly authorized representative as of the date written below.
(Company name)

By: _____

Title: _____

Date: _____
NOTE: This affidavit must be signed in front of a notary and notarized
Contact information to request test reports: Name: _____

Phone number: _____

NOTE: Information describing the product must accompany the Letter of Attestation (e.g., brochures, pamphlets etc.)

Disclosure of modifications used to this equipment which are necessary to meet ATT -TP-76200 requirements:

_____

_____

If shielded cable required to meet GR-1089, Section 4.6. explain:

_____

_____

Copyright ©2014, AT&T . All Rights Reserved.

16.9. *Product Change Notice Statement*

LETTER OF ATTESTATION - PCN

Equipment Compliance to AT&T Services Technical Publication ATT-TP-76200 Requirements

(Company name) hereby asserts, to the best of its knowledge, and pursuant conclusions drawn from sound engineering judgment, that the PCN described below has been evaluated as having no significant impact to the compliance of the equipment listed below to **ALL** applicable AT&T Technical Publication ATT-TP-76200 requirements, except as noted below.

Equipment vendor name:

Equipment model PCN is for:

PCN Number:

Description of PCN:

ATT-TP-76200 requirements NOT COVERED by this document

Describe the engineering justification for concluding the PCN will not affect ATT-TP-76200 compliance:

(Company name) has caused this Letter of Attestation to be executed by its duly authorized representative as of the date written below.

By: _____

Title: _____

Date: _____

Phone number: _____

Copyright ©2014, AT&T . All Rights Reserved.

16.10. *Form LOA-LE*

LETTER OF ATTESTATION – Lab Entry

Equipment Compliance to AT&T Services Technical Publication ATT-TP-76200 Requirements

Form LOA-001, *Letter of Attestation for Lab Entry,* shall be completed, signed and notarized by supplier when equipment is intended for placement in AT&T test laboratories and the equipment does NOT meet Objective 1.11 of this document.

Per requirement 1.11 (Company name) hereby asserts, to the best of its knowledge, and pursuant conclusions drawn from sound engineering judgment, that the equipment described below meets or exceeds electrical safety and fire standards as detailed in UL 60950.

Equipment vendor name:

Equipment model:

(Company name) has caused this Letter of Attestation to be executed by its duly authorized representative as of the date written below.

By: _____

Title: _____

Date: _____

Phone Number: _____

NOTE: This affidavit must be signed in front of a notary and notarized

Copyright ©2014, AT&T . All Rights Reserved.

16.11. *SJR Pb-free Solder*

AT&T SERVICES LETTER OF ATTESTATION

Product Family Compliance to AT&T Services Technical Publication ATT-TP-76200 Pb-free Solder Requirements

(Company name) hereby asserts that (Product/System Family) being submitted for AT&T's acceptance is in compliance with ATT-TP-76200 Section 12.2. (Company name) hereby attests that:

1. One or more of the supplier's Pb-free circuit pack assemblies has previously been submitted to AT&T and has been accepted as successfully meeting the requirements of ATT-TP-76200 Section 12.2 paragraph 2.1:

   "Vendors' first submission of a Pb-free assembly shall meet the full test requirements of ATIS-0600020 and be accompanied by copies of the test reports confirming compliance with the ATIS standard. Alternative testing procedures, normally carried out by the Vendor as part of its Pb-free product realization process, may be substituted with prior approval of AT&T. Request for approval must include details of the proposed test procedure and Vendors' explanation of how it equals or surpasses ability of the ATIS tests to expose problems related to Pb-free solder joints and/or material weaknesses associated with the higher temperatures of Pb-free solder processes. The checklist contained in Section 4.3 of ATIS-0600020 shall be completed and submitted regardless of the test method used."

2. All Pb-free circuit packs comprising the product/system family currently being submitted for AT&T's acceptance have been realized via the same qualified Pb-free processes used for the circuit pack assemblies cited in (1) above. These include supplier's processes for selection/qualification of Pb-free compatible components, PCB laminates and solder alloys and for assembly facility qualification.

3. Documentation of above processes shall be made available for inspection upon AT&T's request.

(Company name) has caused this Letter of Attestation to be executed by its duly authorized representative as of the date written below.

(Company name)

By: _____

Title: _____

Date: _____
NOTE: This affidavit must be signed in front of a notary and notarized
Contact information to request test reports:
Name: _____

Phone number: _____

Copyright ©2014, AT&T . All Rights Reserved.

16.12. *Outside the United States*

AT&T SERVICES LETTER OF ATTESTATION
for Equipment Deployed Outside the United States

Completed document must be submitted for any product intended for deployment in the AT&T network outside of the United States of America..

Equipment vendor name:

Equipment model:

General technology description including drawings, pictures, etc.:

Detailed description of functionality:

On the next page mark "Yes" or "No" to indicate compliance to homologation* for each country, then list applicable markings received for each country.

Equipment complies with ATT-TP-76200 Section 3A, maximum acoustic noise safety level of 73 dBA sound pressure, as measured according to ANSI ASA S12.12.10-2002, or a comparable standard.
YES ☐ **NO** ☐

(Company name) authorizes this Letter of Attestation to be executed by its representative as of the date written below.

By: _____

Title: _____

Date: _____
NOTE: This affidavit must be signed in front of a notary and notarized
Contact information to request test reports:
Name: _____
Phone number: _____

Disclosure of modifications used to this equipment which are necessary to meet requirements:

Page 1

Copyright ©2014, AT&T . All Rights Reserved.

AT&T SERVICES LETTER OF ATTESTATION
for Homologation* of Equipment Deployed Outside the United States

***Homologation: Indicates compliance to all of a country's applicable codes and requirements, including but not limited to electrical safety, fire, electromagnetic emissions, hazardous substances, etc. for electronic equipment.**
(Company name) hereby asserts that the equipment listed below has met the homologation requirements for all countries marked "Yes".

- *Equipment model:*

Country	Homologation Compliance YES/NO	List Applicable Code/ Requirements Markings Received	Country	Homologation Compliance YES/NO	List Applicable Code/ Requirements Markings Received
ARGENTINA			MALAYSIA		
AUSTRALIA			MEXICO		
AUSTRIA			MOROCCO		
BELGIUM		CE, RoHS, WEEE	NETHERLANDS		
BRAZIL			NORWAY		
BULGARIA			PAKISTAN		
CANADA			PANAMA		
CHILE			PERU		
CHINA			PHILIPPINES		
COLOMBIA			POLAND		
CROATIA			PORTUGAL		
CYPRUS			QATAR		
CZECH REPUBLIC			ROMANIA		
DENMARK			RUSSIA		
ECUADOR			SAUDI ARABIA		
FINLAND			SINGAPORE		
FRANCE			SLOVAKIA		
GERMANY			SOUTH AFRICA		
GREECE			SOUTH KOREA		
HONG KONG			SPAIN		
HUNGARY			SWEDEN		
INDIA			SWITZERLAND		
INDONESIA			TAIWAN		
IRELAND			THAILAND		
ISRAEL			TURKEY		
ITALY			UK		
JAPAN			UNITED ARAB EMIRATES		
KUWAIT			VENEZUELA		

Copyright ©2014, AT&T . All Rights Reserved.

LUXEMBOURG			VIETNAM		
Add any additional Countries as needed:					

Copyright ©2014, AT&T . All Rights Reserved.

17. APPENDIX B:

ATT-TP-76200 EQUIPMENT CHANGE TEST GUIDELINES

17.1. *Purpose*

The purpose of this appendix is to provide equipment suppliers a guide to help determine what tests may not need to be performed on a product enhancement to verify conformance to ATT-TP-76200 Ancillary requirements.

17.2. *General*

Some equipment enhancements are so minor that a complete retest of the equipment may not be necessary. Typically, when a equipment supplier requests a re-test waiver to run tests on equipment enhancements, data comparing the new equipment to the existing equipment is submitted to the company representative for evaluation by AT&T Services. Depending on the equipment under review, this data may include pictures, fire load data, descriptions of electrical components, etc. Each AT&T Services equipment evaluation subject matter expert (SME) then reviews this data and responds with an assessment of what tests are required**.** *This Appendix is a guideline only. It is the equipment suppliers' responsibility to satisfactorily document that the new equipment conforms to applicable requirements.* This Appendix only applies to equipment enhancements to equipment previously evaluated as in conformance to applicable ATT-TP-76200 requirements and approved for use in AT&T.

Software upgrades/changes shall be evaluated if it involves:

- Additional or revised hardware
- Activation of previously unused hardware
- An increase in the amount of power supplied to the hardware

17.3. *Retest Guidelines by ATT-TP-76200 Sections*

A. Section 2, Electromagnetic Compatibility

Electromagnetic Interference – Emission & Immunity (ATT-TP-76200 Req. 2.4 – 2.5)

- Equipment suppliers should reassess or retest their equipment's Emissions and Immunity performance in accordance with GR-1089 CORE, Section 3.4.7. As part of their reassessment, equipment supplier shall consider the effects of software changes on the Emissions and Immunity performance of their equipment.

Lightning, AC Power Faults, Steady State Power Induction, Electrical Safety & DC Potential Difference (ATT-TP-76200 Req. 2.6 – 2.9).

Copyright ©2014, AT&T . All Rights Reserved.

- Equipment supplier's should reassess or retest their equipment's performance for Lightning, AC Power Faults, Steady State Power Induction, and Electrical Safety & DC Potential Difference whenever materials, components, circuit layout or accessibility is changed. .Equipment should be reassessed or retested when changes in software activate hardware not previously active or affect the equipment's ability to the EMC requirements of ATT-TP-76200 (Req. 2.6 – 9). The equipment's reassessment or retesting may include all of the technical requirements in these sections of ATT-TP-76200. However, the reassessment or retesting is usually limited to only those technical requirements effected by the change in the equipment.

B. Section 3, Acoustic Noise (ATT-TP-76200 Section. 3.)

- Equipment suppliers should reassess or retest their equipment's Acoustic Noise performance when a change is made to the equipment's fan design, fan control system or a change in the number of fans within the equipment.

C. Section 4, ESD

- Subsystems should be tested whenever changes are introduced that may alter ESD susceptibility. Such changes may include a modified printed wiring board, new/or additional components additional components, changes to the power supply, additional telecommunications ports, and changes in chassis design, software activation of existing hardware or increased clock speed.

D. Section 5, Grounding

- The only Grounding requirements for Ancillary equipment are the short circuit tests. Embedded ac or dc power supplies should be tested whenever changes are introduced that could alter these. Such changes may include a modified printed wiring board, new components or additional components, changes to the power supply, additional telecommunications ports, changes in chassis design, software activation of existing hardware or increased clock speed.

E. Section 6, Thermal

F. Temperature and Humidity

If the new equipment is significantly different from existing compliant equipment (e.g., different sub components, wiring, spacing, etc.) the previous test data may not be applicable to the new equipment. In order to be allowed to forego temperature and humidity testing on a new equipment, the equipment supplier needs to demonstrate to AT&T Services that the new equipment is physically almost identical to the existing compliant equipment. This may be done via photographs, written descriptions, statements, etc.

Heat Dissipation

Copyright ©2014, AT&T . All Rights Reserved.

Heat dissipation should be recalculated whenever a change is introduced that changes the power usage of the unit.

Airflow Path

Airflow path(s) should be updated whenever a change is introduced that changes the documented airflow(s) of the unit.

Direction and Velocity (Effective 1/1/2012)

Direction and velocity(ies) of the designated airflow paths should be updated whenever a change is introduced that changes the documented airflow(s) of the unit.

G. Section 7, DC Power

The equipment supplier may perform an analysis, using good engineering based on similarities to the existing equipment, predicting the probable conformance of the new equipment to Ancillary DC Power requirements. This analysis should consider similarities and differences of electric components, wiring, and power levels. The analysis shall be submitted to the company representative for review and approval by AT&T Services.

H. Section 8, Airborne Contaminants

In reference to Airborne Contaminants testing, Telcordia GR-1274-CORE, states that "The qualification test shall be passed once for each new family of printed wiring assemblies." Based on Telcordia's assessment, new assemblies for enhanced equipment need not be tested for airborne contaminants if they meet the criteria for the same design family of printed boards, defined as follows:

- *A design family consists of printed wiring boards from the same manufacturer; using the same design rules for minimum line spacing and maximum electric field, and using components that require the same bias voltages. Within the same design family, boards shall have the same finish, i.e. they shall all be bare or all be coated with the same overcoat.*

  If the equipment supplier does not test some or all of the printed wiring boards in enhanced equipment, they shall supply a statement affirming that the board(s) not tested meets the definition for being in the same design family of a equipment previously approved for use in AT&T. Documentation verifying the conformance of the tested card must be submitted for review.

I. Section 9, Shock and Vibration

Equipment should be tested whenever changes are introduced that could alter the physical integrity of the unit.

Copyright ©2014, AT&T . All Rights Reserved.

Section 10, Fire Resistance:

Reasons for Reassessment

Generally, equipment that have been determined to be acceptable for purchase from a fire resistance perspective do not have to be re-evaluated or retested unless subsequent changes to the equipment include one or more of the following:

1) A change in the manufacturer's unique equipment identifier.
2) A modification to an equipment assembly's enclosure that increases ambient air circulation.
3) The addition of integral or separately mounted cooling fan(s) or a manufacture's requirement or recommendation that fans be used with the equipment.
4) The substitution of metallic apparatus with combustible material.
5) A change in an equipment assembly's electrical protection circuitry that increases the ampere rating of an overload protection device or affects the operational characteristics of a cooling fan.
6) The addition of printed circuit board(s) to one or more existing printed circuit board.
7) The addition of vertically oriented printed circuit boards to the extent that overall circuit board surface area within the unit is increased by 300 cm^2 (46.5 $in.^2$).
8) Evolution of plug-in circuit packs used in equipment makes it questionable whether the equipment accurately resembles its original test configuration.

Acceptance of new Equipment by “similarity” as compared with a previously Approved Equipment.

Generally ,if a pizza box type equipment having the same size, weight, physical and electrical properties as well as possessing the same material components to that of a equipment that has been previously tested and passed for fire propagation characteristics, need not be tested again.

A statement is required from an approved testing lab stating:

1) Equipment “A” contains same material as Equipment “B”

2) Equipment “A” has the same physical and electrical characteristics as equipment “B”

3) Equipment “A” has same fire propagation characteristics as Equipment “B”

Submit:

4) A test report with date and test results for Equipment “B”

5) Any exception taken during the test of Equipment “B”

Copyright ©2014, AT&T . All Rights Reserved.

6) Any dissimilarity between Equipment “A” and Equipment”B”

Copyright ©2014, AT&T . All Rights Reserved.